SQFlex

Renewable-energy-based water supply systems

50/60 Hz



be
think
innovate

GRUNDFOS

Table of contents

1. Product data **4**
Performance range . . . 4
Applications . . . 5
SQFlex system . . . 5
Type keys . . . 7
Pumped liquids . . . 7
Curve conditions . . . 7
System overview . . . 8

2. Features and benefits **9**
Dry-running protection . . . 9
High efficiency . . . 9
Overvoltage and undervoltage protection . . . 9
Overload protection . . . 9
Overtemperature protection . . . 10
Maximum Power Point Tracking (MPPT) . . . 10
Wide voltage range . . . 10
Reliability . . . 10
Installation . . . 10
Service . . . 10

3. Applications **11**
SQFlex Solar . . . 11
SQFlex Solar with CU 200 and level switch . . . 12
SQFlex Solar with backup generator . . . 13
SQFlex Solar with CU 200 and backup generator . . . 14
SQFlex Solar with backup batteries . . . 15
SQFlex Wind . . . 16
SQFlex Wind with CU 200 and level switch . . . 17
SQFlex Combi . . . 18
SQFlex Combi with CU 200 and level switch . . . 19
SQFlex system with generator as power supply . . . 20

4. System components **21**
SQF submersible pump . . . 21
CU 200 SQFlex control unit . . . 21
CIU 903 SQFlex control unit for remote monitoring . . . 23
IO 50 SQFlex switch box . . . 24
IO 101 SQFlex switch box . . . 24
IO 102 SQFlex breaker box . . . 25
Charge controller . . . 25
Wind turbine . . . 25
Generator . . . 25

5. System sizing **26**
Sizing of SQFlex system . . . 26
Solar panel wiring . . . 26

6. Performance curves **28**
SQF 0.6-2 . . . 28
SQF 0.6-3 . . . 28
SQF 1-30 . . . 29
SQF 1-70 . . . 29
SQF 1.2-2 . . . 30
SQF 1.2-3 . . . 30
SQF 2.5-2 . . . 31
SQF 3A-10 . . . 31
SQF 3-105 . . . 32
SQF 5A-3 . . . 32
SQF 5A-7 . . . 33
SQF 5-70 . . . 33
SQF 7-4 . . . 34
SQF 7-55 . . . 34
SQF 9-3 . . . 35
SQF 14-3 . . . 35

7. Technical data **37**
Dimensions and weights . . . 37
Electrical data . . . 37
SQF pump . . . 38
CU 200 SQFlex control unit . . . 38
CIU 903 SQFlex control unit . . . 39
IO 50 SQFlex switch box . . . 40
IO 101 SQFlex switch box . . . 40
IO 102 SQFlex breaker box . . . 40
Material specification, helical rotor pump . . . 41
Material specification, 3" SQ(F) hydraulic . . . 42
Material specification, SQF 3A, SQF 5A . . . 43
Material specification, SQF 7, SQF 9, SQF 14 . . . 44
Material specification, motor . . . 45
Material specification, motor . . . 46

8. Product numbers **47**
SQF submersible pump . . . 47
CU 200 SQFlex control unit . . . 47
CIU SQFlex (GRM) control unit . . . 47
IO 50 SQFlex switch box . . . 47
IO 101 SQFlex switch box . . . 47
IO 102 SQFlex breaker box . . . 47

9. Accessories **48**
Solar cables . . . 48
Level switch . . . 48
Pressure switch . . . 48
Submersible drop cable . . . 48
Cable termination kit, type KM . . . 48
Cable clips . . . 49
Straining wire . . . 49
Wire clamp . . . 49
Zinc anodes . . . 49
Grease . . . 49
Flow sleeve for SQFlex 3" . . . 50
Flow sleeve 3"SQ(F) hydraulic . . . 50
Flow sleeve for SQFlex 4" . . . 50

10. Grundfos Product Center **51**

1. Product data

Performance range

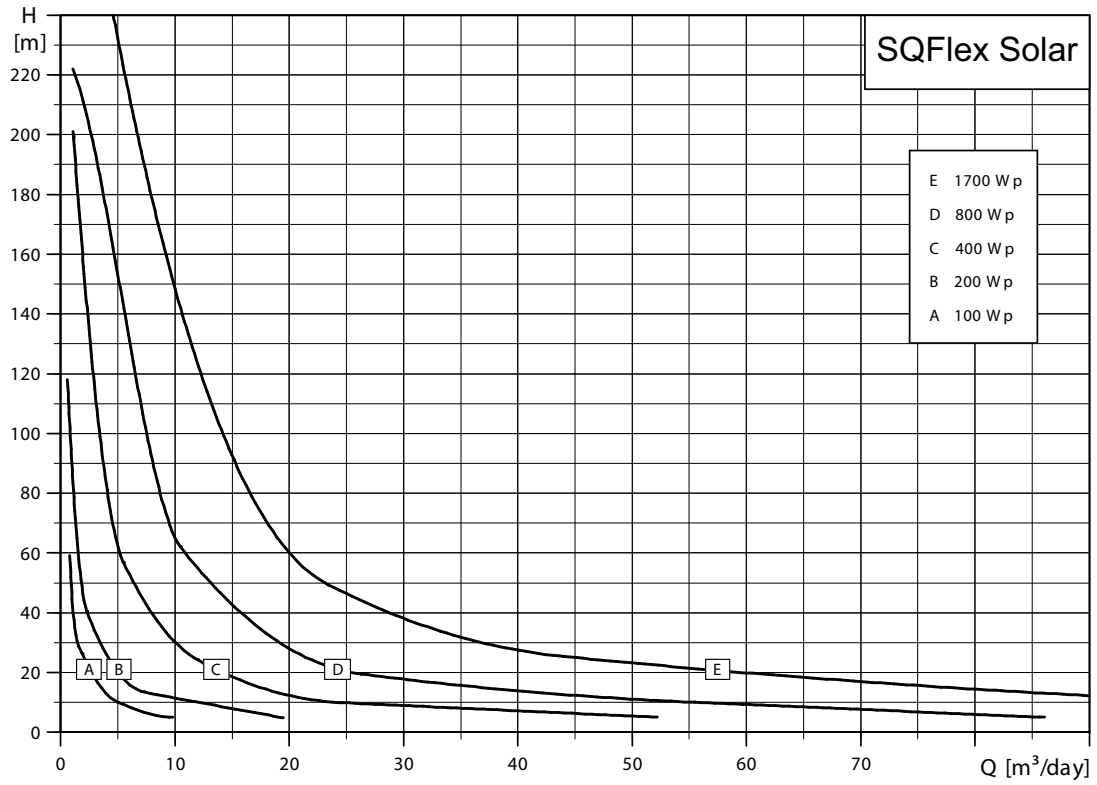

TM02 2337 2309

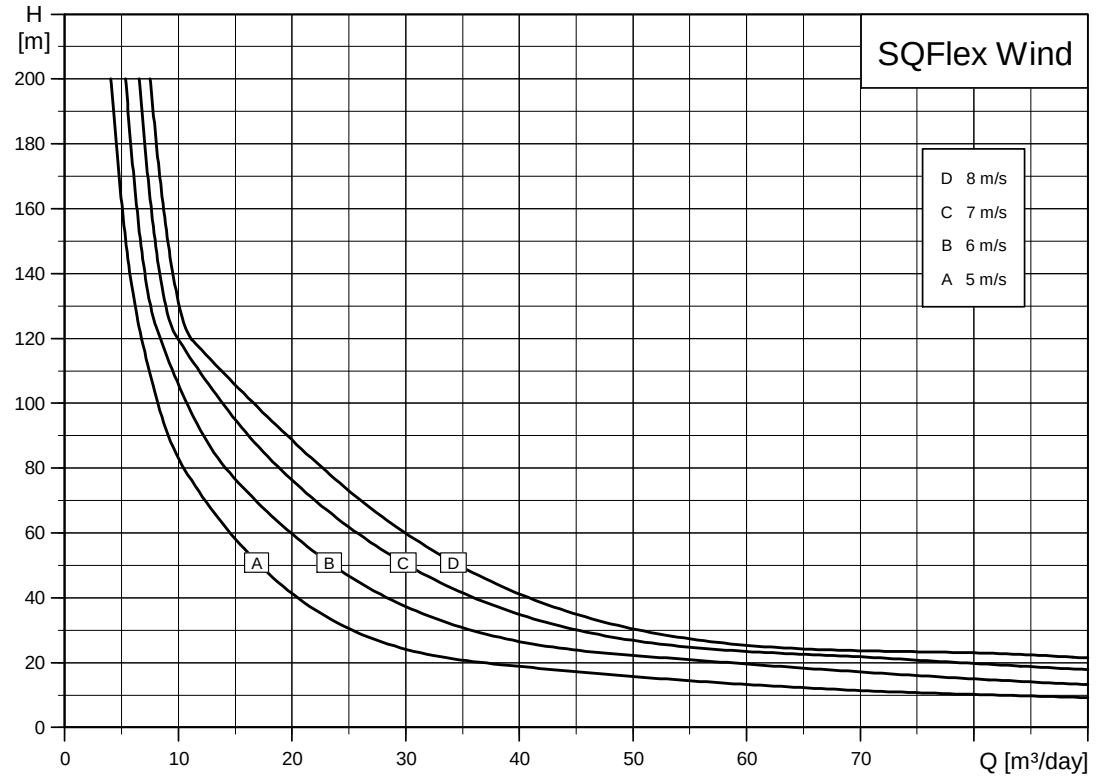

TM02 2411 2309

Note: The curves must not be used as guarantee curves.

Applications

Being designed for continuous as well as intermittent operation, the SQFlex system is especially suitable for water supply applications in remote locations, such as:

- villages, schools, hospitals, single-family houses, etc.
- farms (watering of cattle, irrigation of fields and greenhouses)
- game parks and game farms (watering applications)
- conservation areas (pumping of surface water)
- floating pump installations for pumping of water from ponds and lakes.

SQFlex system

The SQFlex system is a reliable water supply system based on renewable energy sources, such as solar and wind energy. The SQFlex system incorporates an SQF submersible pump.

Very flexible as to its energy supply and performance, the SQFlex system can be combined and adapted to any need according to the conditions of the installation site.

The system components are the following:

- SQF submersible pump
- CU 200 SQFlex control unit
- CIU 903 SQFlex control unit (option for remote monitoring)
- IO 50 SQFlex switch box
- IO 101 SQFlex switch box
- IO 102 SQFlex breaker box
- charge controller
- energy supply system:
  - solar panels
  - wind turbine
  - generator
  - batteries.

Pump

The SQF pump range comprises two pump technologies:

- helical rotor pump (3") for high heads and small flow rates
- centrifugal pump (3" and 4") for low heads and large flow rates.

The performance curves below illustrate the pump performance of the two pump models.

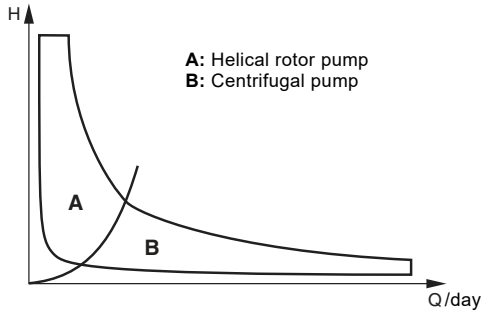

Fig. 1 Performance ranges for helical rotor and centrifugal pumps

All pump types are available in two material variants:

- SQF is the standard version made of stainless steel DIN W.-Nr. 1.4301
- SQF-N is made of stainless steel DIN W.-Nr. 1.4401.

Motor

The motor has been developed specifically for the SQFlex system and is designed according to the permanent-magnet principle with built-in electronic unit.

The SQFlex 3" motor range comprises different motor sizes, the MSF 3 with 4 different maximum power input (P1) ratings of 300 W, 900W, 1400 W and 2500 W.

The motor speed range is 3000-10700 min^{-1} or 500-3600 min^{-1}, depending on the motor size, power input and load.

The motor is available in two material variants:

- MSF 3 is the standard version made of stainless steel DIN W.-Nr. 1.4301
- MSF 3 N is made of stainless steel DIN W.-Nr. 1.4401.

The motor has three internal limitations:

- maximum power input (P1)
- maximum current of 8,4 A or 12 A
- maximum speed of 10700 min^{-1} or 3600 min^{-1}.

The pump delivers its maximum performance when one of the above limitations is reached.

Supply voltage

Flexible regarding power supply and power range, the motor can be supplied with either DC or AC voltage:

- 30-300 VDC, PE
- 1 x 90-240 V - 10 %/+ 6 %, 50/60 Hz, PE.

CU 200 SQFlex control unit

CU 200 is a combined status and control unit for the SQFlex system. Moreover, CU 200 enables connection of a level switch placed in a water reservoir or tank.

CIU 903 SQFlex control unit for remote monitoring

The CIU 903 SQFlex is designed to work directly with the SQFlex pump and enables monitoring the system operation anywhere in the world through Grundfos Remote Monitoring when combined with the GSM modem CIM 280. Moreover, CIU 903 allows for connection of a start/stop switch, level switch and pulsating water meter.

It also works with Grundfos GO.

IO 50 SQFlex switch box

The IO 50 is an on/off switch box designed for switching the system power supply on and off.

IO 101 SQFlex switch box

The IO 101 is an on/off switch box designed for switching the system power supply on and off.

The IO 101 is used in solar-powered SQFlex systems with a backup generator.

IO 102 SQFlex breaker box

The IO 102 is an on/off breaker box designed for switching the system power supply on and off.

The IO 102 is used in wind-powered SQFlex systems or wind- and solar-powered SQFlex systems.

The IO 102 makes it possible to slow down or stop the wind turbine.

Charge controller

The charge controller is used when a battery backup system is installed with an SQFlex pumping system.

Solar modules

The solar modules of Grundfos have been developed specifically for the SQFlex system. The solar modules are equipped with plugs and sockets enabling easy connection in parallel.

The number of solar modules required depends on the following factors:

- quantity of water required
- head required
- location of installation.

For further information on solar modules, contact your local Grundfos company.

Generator

In case the power supply from its primary source of energy is temporarily insufficient, the SQFlex system can be powered by a diesel- or petrol-driven generator.

Batteries

The SQFlex system can be powered by batteries with a voltage supply of 30-300 VDC and a maximum current of 8.4 A. DC power supply operation will be limited to the highest possible power depending on the voltage. For example, 48 VDC will give a limiting maximum power of 403 W.

Type keys

Helical rotor pumps

Example	SQF	1.2	-2
Type range			
Rated flow rate [m^3/h] at 3000 min^{-1}			
Number of stages			

Blank = Stainless steel DIN W.-Nr. 1.4301
N = Stainless steel DIN W.-Nr. 1.4401

Centrifugal pumps 4"

Example	SQF	5A	-3
Type range			
Rated flow rate [m^3/h] and pump generation			
Number of stages			

Blank = Stainless steel DIN W.-Nr. 1.4301
N = Stainless steel DIN W.-Nr. 1.4401

Centrifugal pumps 3"

Example	SQF	1	-30
Type range			
Rated flow rate [m^3/h]			
Head [m] at rated flow			

Blank = Stainless steel DIN W.-Nr. 1.4301
N = Stainless steel DIN W.-Nr. 1.4401

Pumped liquids

SQF pumps are applicable in thin, clean, non-aggressive, non-explosive liquids, not containing solid, or long-fibred particles, larger than sand grains.

pH value: 5 to 9.

Liquid temperature: 0 °C to +40 °C.

The pump can run at free convection (~ 0 m/s) at maximum +40 °C.

Sand content

Maximum sand content: 50 g/m^3.

A higher sand content will reduce the pump life considerably due to wear.

Salt content

The table below shows the resistance of stainless steel to Cl^-. The values in the table are based on a pumped liquid with a pH value of 5 to 9.

Stainless steel DIN W.-Nr.	Cl^- content [ppm]	Liquid temperature [°C]
1.4301	0-300	< 40
	300-500	< 30
1.4401	0-500	< 40

For additional protection, for instance if the Cl^- content exceeds 500 ppm, zinc anodes can be used. See section *Zinc anodes* on page 49.

Curve conditions

Performance range, SQFlex Solar

The SQFlex Solar performance range on page 4 is based on the following data:

- solar radiation on a tilted surface (tilt angle of 20°)
- H_T = 6 kWh/m^2 per day
- ambient temperature: +30 °C
- 20° northern latitude.

Performance range, SQFlex Wind

The SQFlex Wind performance range on page 4 is based on these data:

- average wind speed (measured over one month)
- calculations according to Weibull's factor k=2
- continuous operation over 24 hours.

Specific performance charts

The specific performance charts on pages 28 to 35 are based on the following guidelines:

- All curves show mean values.
- The curves must not be used as guarantee curves.
- The typical deviation is ± 15 %.
- The measurements have been made at a water temperature of +20 °C.
- The curves apply to a kinematic viscosity of 1 mm^2/s (1 cSt). If the pump is used for liquids with a viscosity higher than that of water, it will reduce the head and increase the power consumption.

Pressure loss

The QH curves are inclusive of inlet and valve losses at actual speed.

System overview

The SQFlex system can be used in a number of combinations as shown in the table below.

System	System components							
	Pump	Solar panels ★	Wind turbine	Generator/battery	Charge controller	Switch box or breaker box	Control unit	Optional extras
SQFlex Solar See page 11.						 IO 50		
SQFlex Solar with CU 200 and level switch See page 12.							 CU 200	 (★★)
SQFlex Solar with backup generator See page 13.						 IO 101		
SQFlex Solar with CU 200 and backup generator See page 14.						 IO 101	 CU 200	 (★★)
SQFlex Solar with backup batteries See page 15.				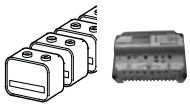		 IO 50 or IO 101 (★★)	 CU 200	Pressure tank  Pressure switch 
SQFlex Wind See page 16.						 IO 102		
SQFlex Wind with CU 200 and level switch See page 17.						 IO 102	 CU 200	 (★★)
SQFlex Combi See page 18.						 IO 102		
SQFlex Combi with CU 200 and level switch See page 19.						 IO 102	 CU 200	 (★★)
SQFlex system with generator as power supply See page 20.						 IO 101		

★ For number of solar panels required, consult the sizing tool. See *Grundfos Product Center* on page 51.
★★Optional.

2. Features and benefits

Dry-running protection

The SQF pump is protected against dry running in order to prevent damage to the pump. The dry-running protection is activated by a water level electrode placed on the motor cable 0.3 to 0.6 meter above the pump, depending on pump type.

The water level electrode measures the contact resistance to the motor sleeve through the water. When the water level falls below the water level electrode, the pump stops. The pump automatically restarts five minutes after the water level is above the water level electrode.

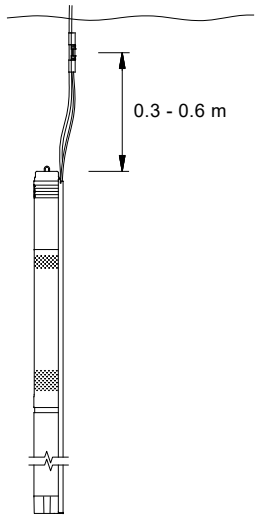

Fig. 2 Vertical installation

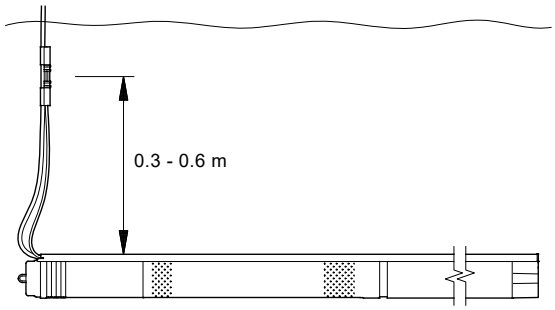

Fig. 3 Horizontal installation

High efficiency

The MSF 3 motor is a permanent-magnet motor (PM motor) featuring a higher efficiency within the power range compared to a conventional asynchronous motor.

In addition, the segmented motor stator also contributes to high efficiency.

The MSF 3 motor is furthermore characterised by a high locked-rotor torque even at low power supply.

Overvoltage and undervoltage protection

Overvoltage and undervoltage may occur in case of unstable power supply or a faulty installation.

The pump stops if the voltage falls outside the permissible voltage range. The motor automatically restarts when the voltage returns within the permissible voltage range. Therefore, no extra protection relay is needed.

Note: The MSF 3 motor is protected against transients from the power supply according to EN/IEC 61000-4-5 (6 kV). In areas with high lightning intensity, we recommend external lightning protection.

Overload protection

In case the upper load limit is exceeded, the motor will automatically compensate by reducing the speed. If the speed falls below minimum speed, the motor stops automatically.

The motor remains stopped for 30 seconds, then the pump will automatically attempt to restart.

The overload protection prevents burnout of the motor. Consequently, no extra motor protection is required.

Overtemperature protection

A permanent-magnet motor gives off very little heat to its surroundings. In combination with an efficient internal circulation system leading the heat away from the rotor, stator and bearings, optimal operating conditions are ensured for the motor.

As an extra protection, the electronic unit has a built-in temperature sensor. When the temperature rises above +85 °C, the motor automatically stops. Once the temperature drops to +75 °C, the motor automatically restarts.

Maximum Power Point Tracking (MPPT)

The built-in electronic unit gives the SQFlex system a number of advantages compared to conventional products. One of these advantages is the built-in microprocessor with MPPT (Maximum Power Point Tracking).

Due to the MPPT function, the pump duty point is continuously optimised according to the input power available. MPPT is only available for pumps connected to DC supply.

Wide voltage range

The wide voltage range enables the motor to operate at any voltage from 30-300 VDC or 90-240 VAC. This makes installation and sizing especially easy.

Reliability

The MSF 3 motor has been developed to achieve high reliability through the following features:

- carbon/ceramic bearings
- excellent starting capabilities
- various protection facilities.

Installation

The following features apply during the installation of the SQF pump:

- low weight ensuring user-friendly handling
- installation in 3", 4" or larger boreholes
- no need for motor starter/starter box
- SQF available with cable and socket.

Note: Horizontal installation requires the water level electrode to be placed minimum 0.3 to 0.6 meter above the pump to ensure the dry-running protection.

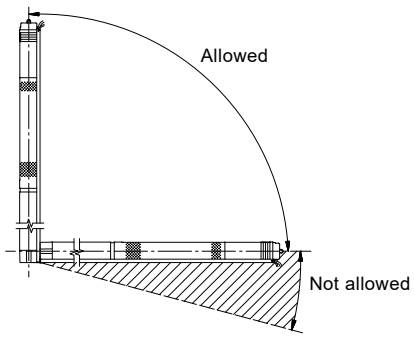

Fig. 4 Installation of SQF pumps

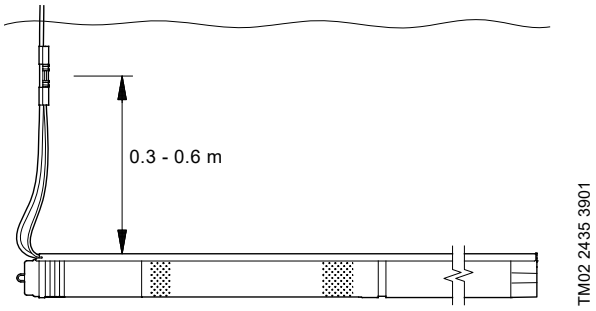

Fig. 5 Horizontal installation

Service

The modular pump and motor design facilitates installation and service. The cable and the end cover with socket are fitted to the pump with screws to enable replacement.

3. Applications

SQFlex Solar

The SQFlex solar system is the simplest of the range of SQFlex systems.

Benefits

The protective circuit incorporated in the motor electronic unit stops the pump in case of dry running or similar situations.

By using the IO 50, the power supply to the pump can be switched off manually, for example in the following cases:

- There is no need for water supply.
- The system requires service.

Other benefits:

- easy installation
- maintenance confined to periodic cleaning of the solar panels
- few and simple components.

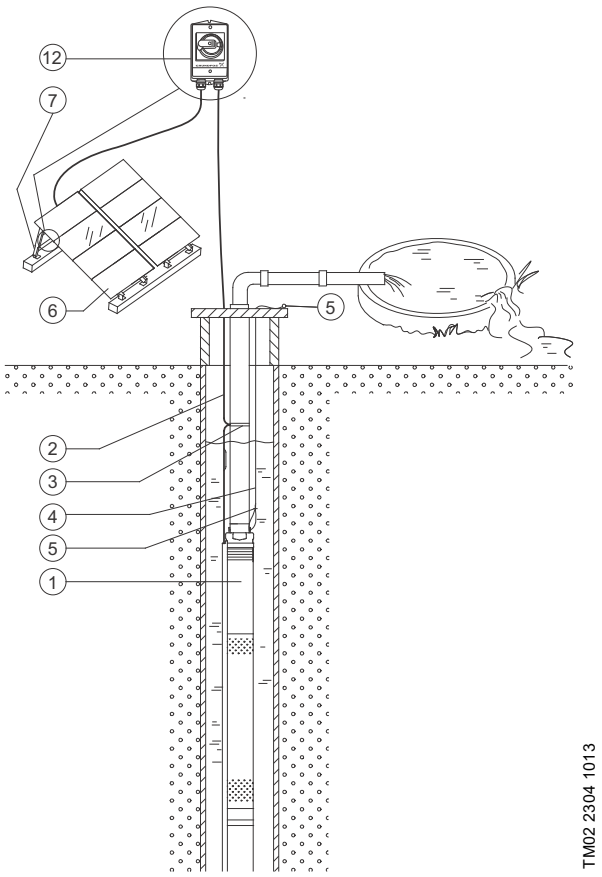

Fig. 6 SQFlex Solar

Pos.	Description
1	SQF pump
2	Submersible drop cable
3	Cable clips
4	Straining wire
5	Wire clamps
6	Solar panels
7	Support structure
12	IO 50 SQFlex switch box

Note: For the number of solar panels required, consult the sizing tool. See *Grundfos Product Center* on page 51.

SQFlex Solar with CU 200 and level switch

The SQFlex Solar system allows solar energy to be stored as water in a reservoir.

SQFlex Solar systems with a water reservoir are used, for instance, in the following cases:

- There is a need for water supply at night.
- For short periods, the solar energy is insufficient to run the pump.
- A backup water source is needed.

Benefits

Combined with CU 200, the level switch acts as a pump cut-out function when the water reservoir is full.

CU 200 offers indication of status as follows:

- full water reservoir (level switch activated)
- pump operation
- input power.

CU 200 indicates operational stoppage in the following cases:

- dry running
- service (see page 21)
- insufficient energy supply.

Other benefits:

- easy installation
- maintenance confined to periodic cleaning of the solar panels
- few and simple components.

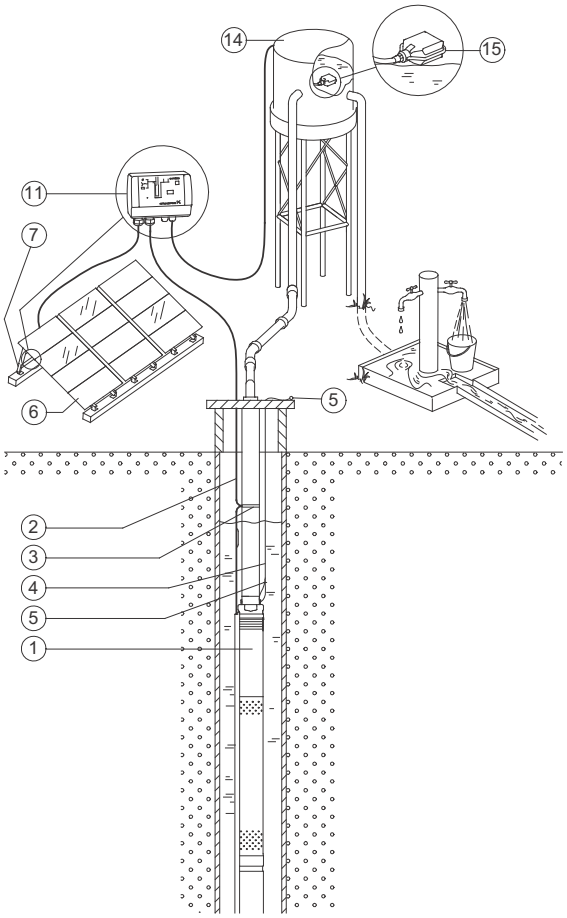

Fig. 7 SQFlex Solar with CU 200 and level switch

Pos.	Description
1	SQF pump
2	Submersible drop cable
3	Cable clips
4	Straining wire
5	Wire clamps
6	Solar panels
7	Support structure
11	CU 200 SQFlex control unit
14	Water reservoir
15	Level switch

Note: For the number of solar panels required, consult the sizing tool. See *Grundfos Product Center* on page 51.

SQFlex Solar with backup generator

During periods of limited solar energy, the SQFlex Solar system provides reliable water supply.

The system is connected to an external backup generator via the IO 101.

The system switches automatically to operation via generator when the generator is started.

If the generator is stopped manually or runs out of fuel, the IO 101 automatically changes back to operation via solar energy.

Benefits

The system offers water supply during night or during periods of insufficient solar energy.

Other benefits:

- easy installation
- maintenance confined to periodic cleaning of the solar panels
- few and simple components
- flexibility in terms of energy supply.

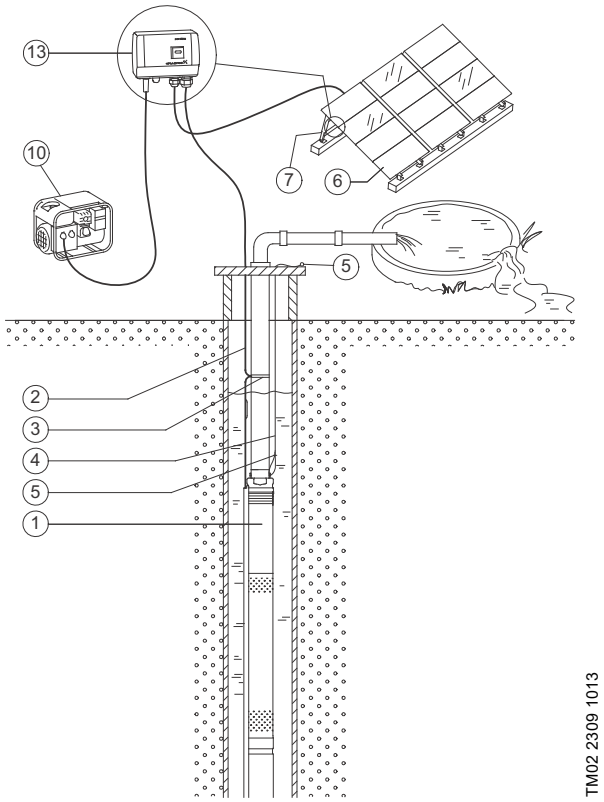

Fig. 8 SQFlex Solar with backup generator

Pos.	Description
1	SQF pump
2	Submersible drop cable
3	Cable clips
4	Straining wire
5	Wire clamps
6	Solar panels
7	Support structure
10	Diesel- or petrol-driven generator
13	IO 101 SQFlex switch box

Note: For the number of solar panels required, consult the sizing tool. See *Grundfos Product Center* on page 51.

SQFlex Solar with CU 200 and backup generator

During periods of limited solar energy, the SQFlex Solar system provides reliable water supply.

The supply of water is ensured by a diesel- or petrol-driven generator connected to the system via the IO 101.

The system switches automatically to operation via generator when the generator is started.

If the generator is stopped manually or runs out of fuel, the IO 101 automatically changes back to operation via solar energy.

Benefits

The system offers water supply during night or during periods of insufficient solar energy.

Other benefits:

- easy installation
- maintenance confined to periodic cleaning of the solar panels
- few and simple components
- flexibility in terms of energy supply.

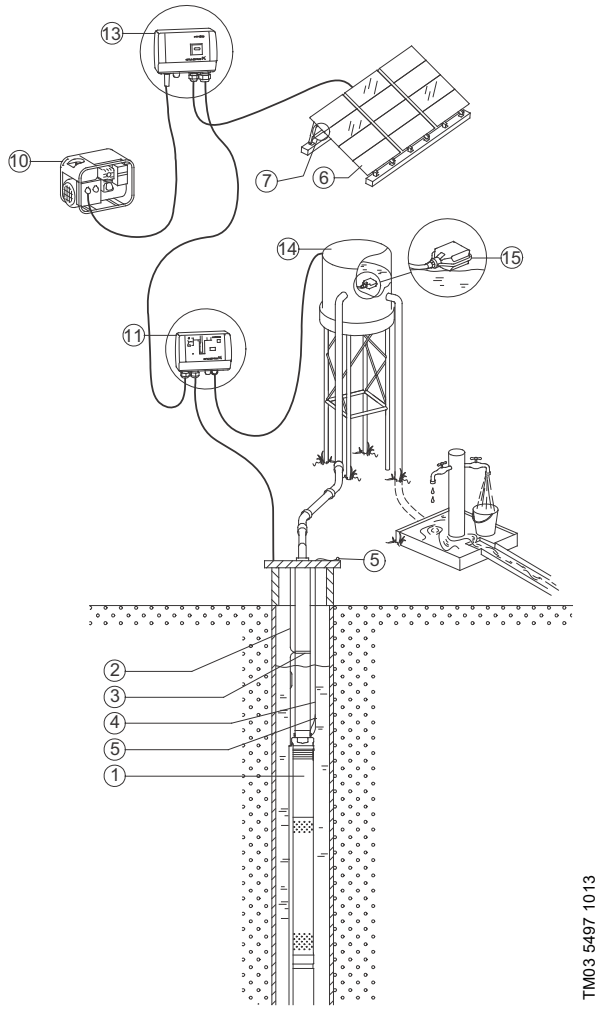

Fig. 9 SQFlex Solar with CU 200 and backup generator

Pos.	Description
1	SQF pump
2	Submersible drop cable
3	Cable clips
4	Straining wire
5	Wire clamps
6	Solar panels
7	Support structure
10	Diesel- or petrol-driven generator
11	CU 200 SQFlex control unit
13	IO 101 SQFlex switch box
14	Water reservoir
15	Level switch

Note: For the number of solar panels required, consult the sizing tool. See *Grundfos Product Center* on page 51.

SQFlex Solar with backup batteries

During periods of limited solar energy, the SQFlex Solar system provides reliable water supply.

The supply of water is ensured by backup batteries connected to the system via the charge controller.

The system is connected as shown in figure 10.

- Power is provided by the solar panels wired to produce minimum 60 VDC and maximum 110 VDC.
- Power from the solar panels is fed into a 48 VDC charge controller which regulates the current fed to the batteries.
- From the charge controller, power passes into the battery bank, which consists of the number of appropriately sized batteries wired in series to achieve 48 VDC (rated) output.
- Power is drawn from the battery bank and routed through a CU 200.
  Option: An IO 50 or IO 101 can be installed to enable disconnection of the DC voltage. If an IO 101 is installed, it is possible to add a generator to the system.
- Power is run from CU 200 to the SQFlex pump.

Benefits

The system offers water supply during the night or during periods of insufficient solar energy.

Other benefits:

- easy installation
- maintenance confined to periodic cleaning of the solar panels
- few and simple components
- flexibility in terms of energy supply.

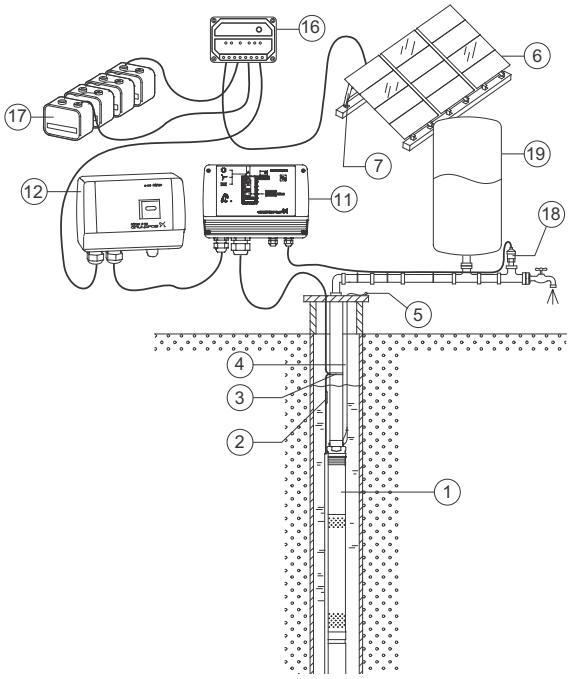

Fig. 10 SQFlex Solar with backup batteries

Pos.	Description
1	SQF pump
2	Submersible drop cable
3	Cable clips
4	Straining wire
5	Wire clamps
6	Solar panels
7	Support structure
11	CU 200 SQFlex control unit
12	IO 101 SQFlex switch box (optional)
16	Charge controller
17	Batteries
18	Pressure switch
19	Pressure tank

Note: For the number of solar panels required, consult the sizing tool. See *Grundfos Product Center* on page 51.

SQFlex Wind

The SQFlex Wind system is based on wind energy as single energy source for pump operation.

The system is suitable for installation in areas where wind is almost constantly present.

As the turbine noise level increases with the wind speed, we do not recommend that you install wind turbine near residential areas.

Benefits

The IO 102 makes it possible to slow down or stop the wind turbine in the following cases:

- There is no need for water supply.
- The system requires service.

Other benefits:

- easy installation
- minimal maintenance
- few and simple components.

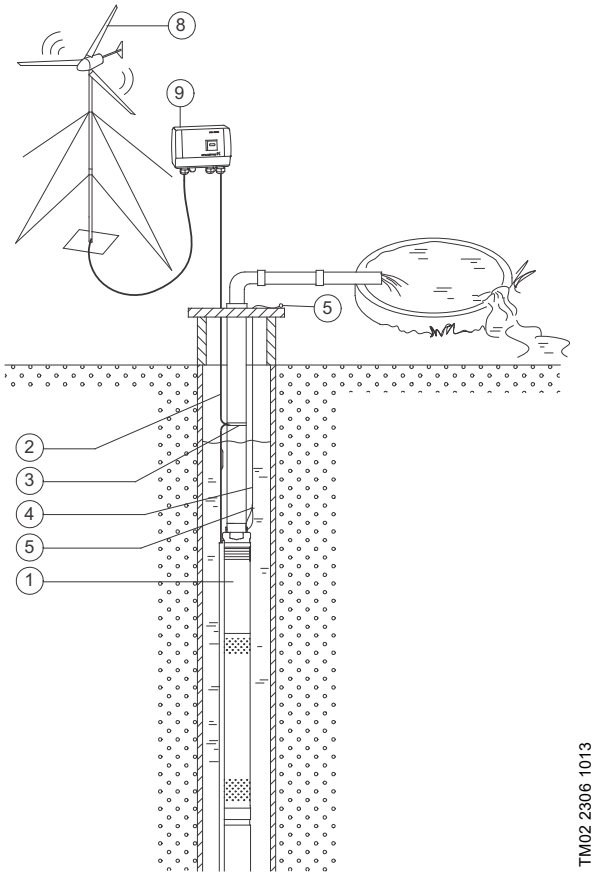

Fig. 11 SQFlex Wind

Pos.	Description
1	SQF pump
2	Submersible drop cable
3	Cable clips
4	Straining wire
5	Wire clamps
8	Wind turbine
9	IO 102 SQFlex breaker box

SQFlex Wind with CU 200 and level switch

The SQFlex Wind system allows wind energy to be stored as water in a reservoir.

SQFlex Wind systems with a water reservoir are used in the following cases:

- For short periods, when wind energy is insufficient to run the pump.
- A backup water source is needed.

As the turbine noise level increases with wind speed, we do not recommend that you install the wind turbine near residential areas.

Benefits

Combined with CU 200, the level switch acts as a pump cut-out function when the water reservoir is full.

CU 200 offers indication of status as follows:

- full water reservoir (level switch activated)
- pump operation
- input power.

CU 200 indicates operational stoppage in the following cases:

- dry running
- service (see page 21)
- insufficient energy supply.

The IO 102 makes it possible to switch off the power supply in the system and to slow down or stop the wind turbine in the following cases:

- There is no need for water supply.
- The system requires service.

Other benefits:

- easy installation
- minimal maintenance
- few and simple components.

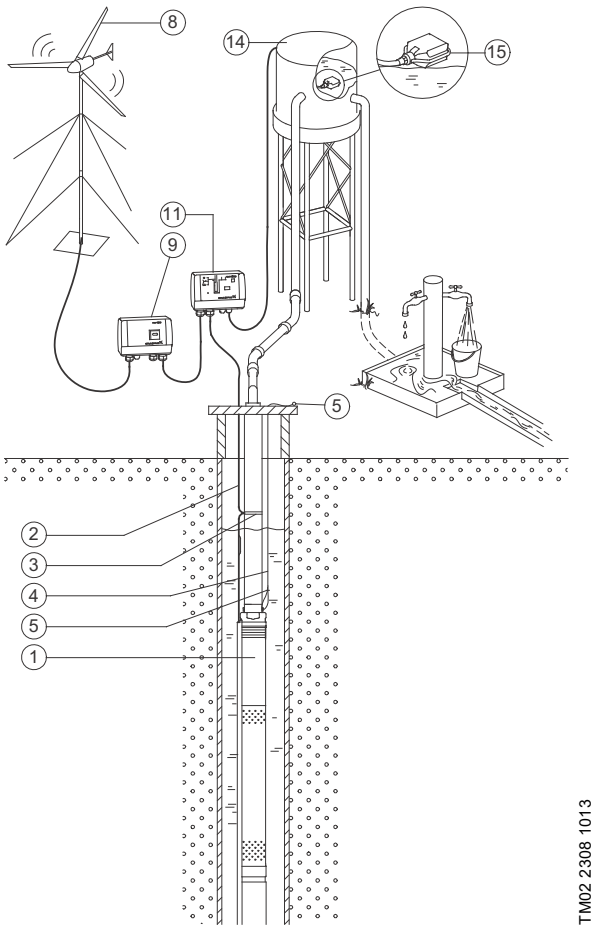

Fig. 12 SQFlex Wind with CU 200 and level switch

Pos.	Description
1	SQF pump
2	Submersible drop cable
3	Cable clips
4	Straining wire
5	Wire clamps
8	Wind turbine
9	IO 102 SQFlex breaker box
11	CU 200 SQFlex control unit
14	Water reservoir
15	Level switch

SQFlex Combi

The SQFlex Combi system is ideal in areas where the solar and/or wind energy is sufficient to run the pump.

The energy supply to the pump is a combination of solar and wind energy.

As the turbine noise level increases with wind speed, we do not recommend that you install the wind turbine near residential areas.

Benefits

The system offers water supply during the night or during periods of insufficient solar energy.

The IO 102 makes it possible to switch off the power supply in the system and to slow down or stop the wind turbine in the following cases:

- There is no need for water supply.
- The system requires service.

Other benefits:

- easy installation
- minimal maintenance
- few and simple components.

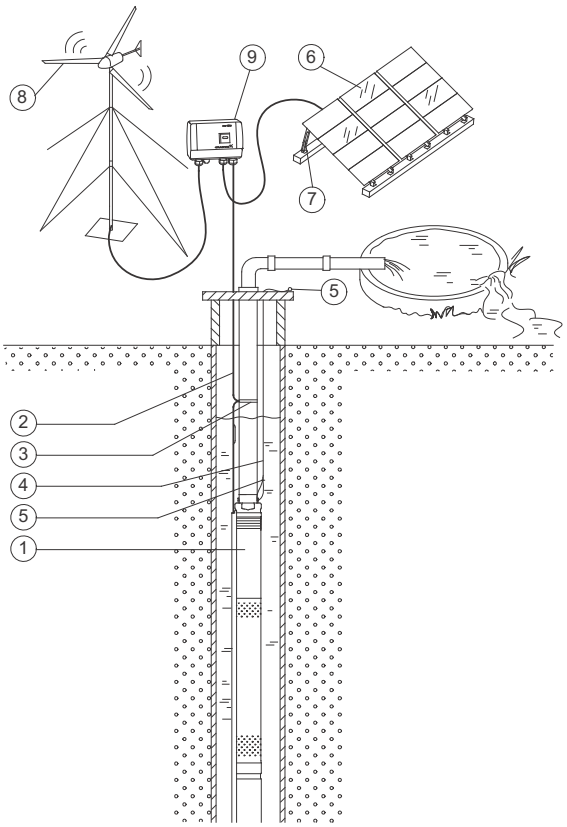

Fig. 13 SQFlex Combi - combination of solar and wind energy

Pos.	Description
1	SQF pump
2	Submersible drop cable
3	Cable clips
4	Straining wire
5	Wire clamps
6	Solar panels
7	Support structure
8	Wind turbine
9	IO 102 SQFlex breaker box

Note: For the number of solar panels required, consult the sizing tool. See *Grundfos Product Center* on page 51.

SQFlex Combi with CU 200 and level switch

The SQFlex Combi system allows solar and wind energy to be stored as water in a reservoir.

SQFlex Combi systems with a water reservoir are used in the following cases:

- For short periods, when the solar or wind energy is insufficient to run the pump.
- A backup water source is needed.

As the turbine noise level increases with the wind speed, we do not recommend that you install the wind turbine near residential areas.

Benefits

Combined with CU 200, the level switch acts as a pump cut-out function when the water reservoir is full.

CU 200 offers indication of status as follows:

- full water reservoir (level switch activated)
- pump operation
- input power.

CU 200 indicates operational stoppage in the following cases:

- dry running
- service (see page 21)
- insufficient energy supply.

The IO 102 makes it possible to switch off the power supply in the system and to slow down or stop the wind turbine in the following cases:

- There is no need for water supply.
- The system requires service.

Other benefits:

- easy installation
- minimal maintenance
- few and simple components.

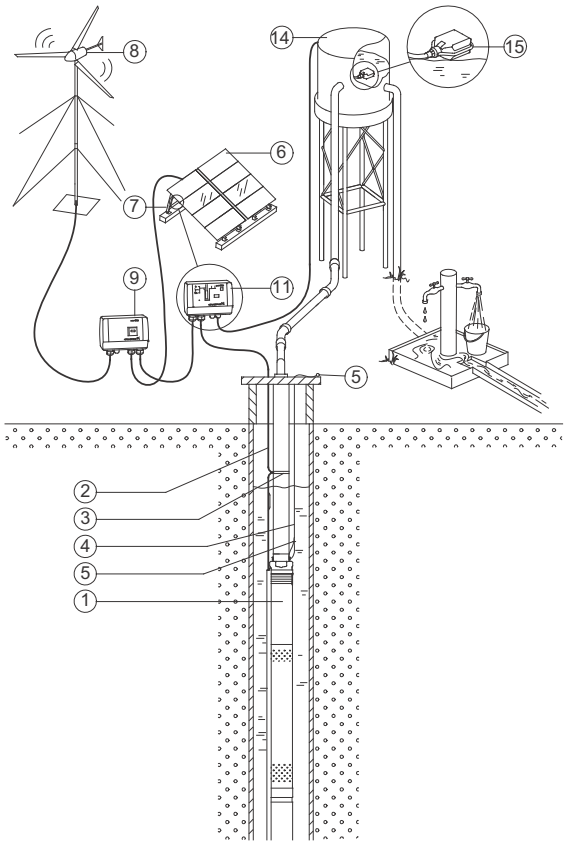

Fig. 14 SQFlex Combi with CU 200 and level switch

Pos.	Description
1	SQF pump
2	Submersible drop cable
3	Cable clips
4	Straining wire
5	Wire clamps
6	Solar panels
7	Support structure
8	Wind turbine
9	IO 102 SQFlex breaker box
11	CU 200 SQFlex control unit
14	Water reservoir
15	Level switch

Note: For the number of solar panels required, consult the sizing tool. See *Grundfos Product Center* on page 51.

SQFlex system with generator as power supply

The SQFlex system is connected to a diesel- or petrol-driven generator.

Benefits

The system offers water supply 24 hours a day, independently of the weather.

Other benefits:

- easy installation
- minimal maintenance
- few and simple components.

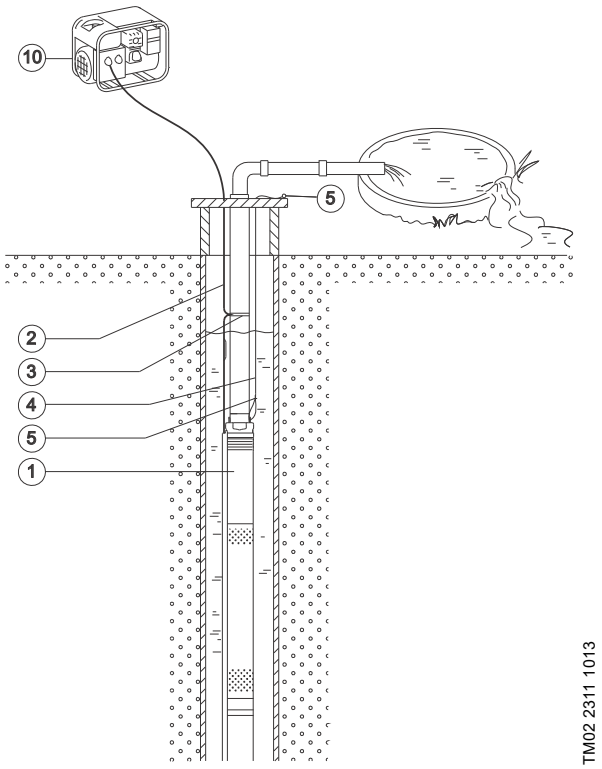

Fig. 15 SQFlex system with generator as power supply

Pos.	Description
1	SQF pump
2	Submersible drop cable
3	Cable clips
4	Straining wire
5	Wire clamps
10	Generator

4. System components

SQF submersible pump

The SQF pump is available as a complete unit only.

The complete SQF pump consists of the following components:

- motor
- 2.0 meter cable with water-level electrode and socket
- cable guard.

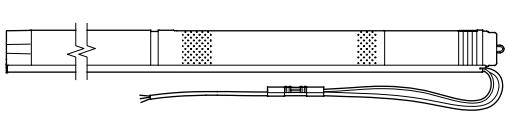

TM02 2217 3901

Fig. 16 SQF pump

The MSF motor is to be connected to the power supply as shown in figure 17.

As the integrated electronic unit enables the motor to handle both DC and AC supply voltages, it makes no difference how the wires "+" and "-", or "N" and "L" are connected.

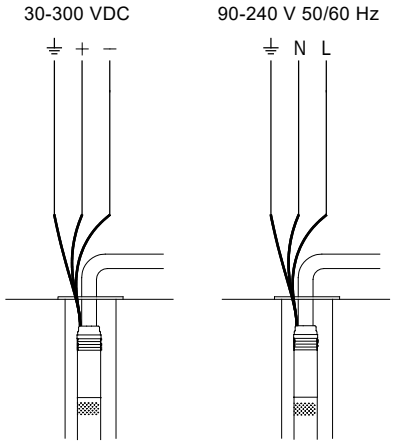

TM02 2437 3901

Fig. 17 Wiring diagram

CU 200 SQFlex control unit

CU 200 is a combined status, control and communication unit especially developed for the SQFlex system, also enabling connection of a level switch.

CU 200 incorporates cable entries for the following connections:

- power supply (pos. 6)
- pump (pos. 7)
- earth (pos. 8)
- level switch (pos. 9).

The position numbers in brackets refer to figure 18.

Communication between CU 200 and the pump takes place via the pump power supply cable. This is called mains-borne signalling (or power line communication), and this principle means that no extra cables between CU 200 and the pump are required.

It is possible to start, stop and reset the pump with the ON/OFF button (pos. 1).

CU 200 offers system monitoring and alarm indication.

The operation of the pump can be monitored through the following indications:

- water reservoir full (level switch) (pos. 2)
- pump running (pos. 3)
- input power (pos. 11).

CU 200 offers the following alarm indications:

- dry running (pos. 10)
- service needed (pos. 5):
  - no contact to pump
  - overvoltage
  - overtemperature
  - overload.

In addition, CU 200 shows the symbols of the energy supply options (pos. 4).

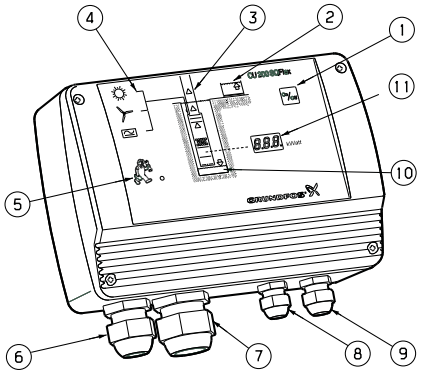

TM02 2325 1206

Fig. 18 CU 200 elements

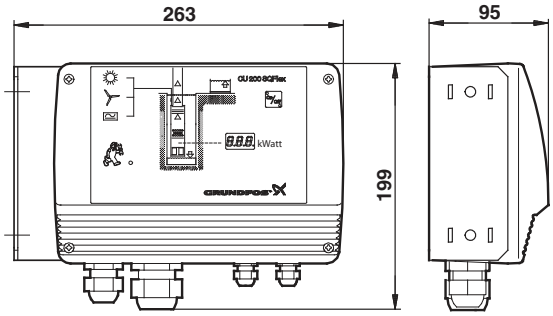

TM02 2323 1206

Fig. 19 Dimensions (stated in mm), CU 200

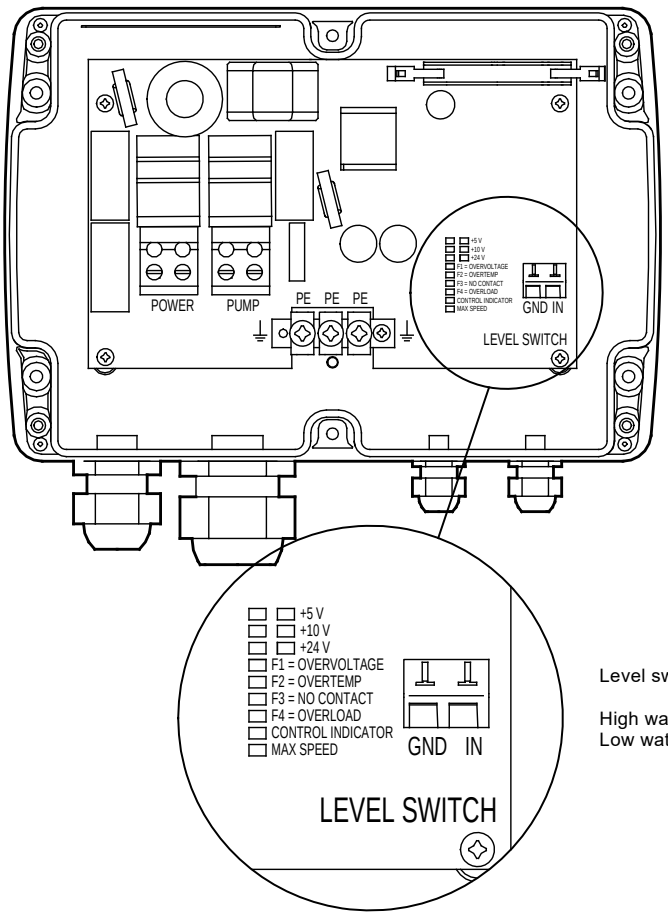

Level switch input

High water level: Contact is closed.
Low water level: Contact is open.

TM02 2515 4401

Fig. 20 Electrical connections, CU 200

CIU 903 SQFlex control unit for remote monitoring

The CIU 903 SQFlex is designed to work directly with the SQFlex pump and enables monitoring the system operation anywhere in the world through Grundfos Remote Monitoring, when combined with the GSM modem CIM 280. Moreover, CIU 903 enables connection of a start/stop switch, level switch and pulsating water meter.

It also works with Grundfos GO.

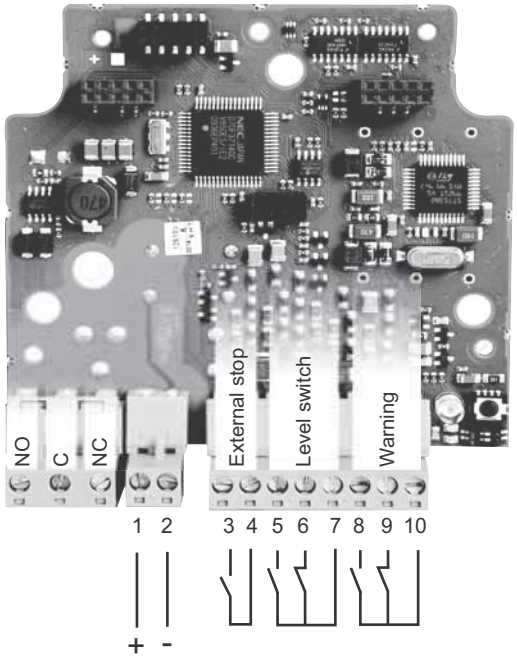

Fig. 21 Electrical connections, CIU 903

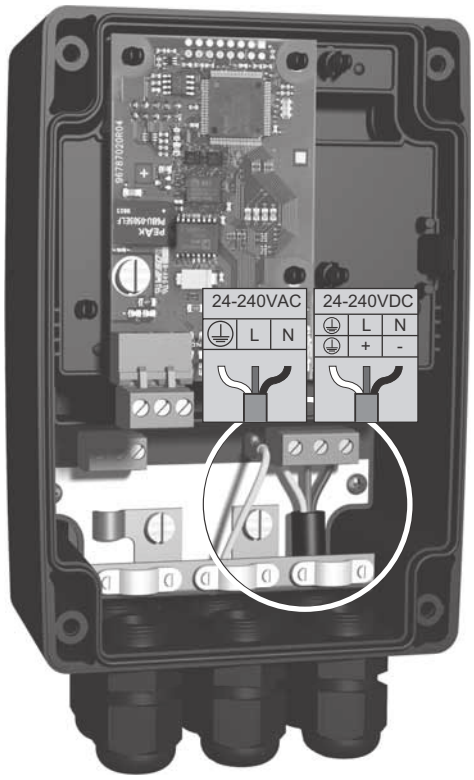

TM05 6101 4512

Communication between CIU 903 and the pump takes place via the pump power supply cable. This is called mains-borne signalling (or power line communication), which means that no extra cables between CIU 903 and the pump are required.

It is possible to start, stop and reset the pump with the start/stop switch.

CIU 903 offers system monitoring and alarm indication.

The operation of the pump can be monitored through the following indications:

- water reservoir full (level switch)
- pump running.

CIU 903 offers the following alarm indications:

- dry running
- service needed:
  - no contact to pump
  - overvoltage
  - overtemperature
  - overload.

Note: CIU 903 will replace CU 200 in the installation.

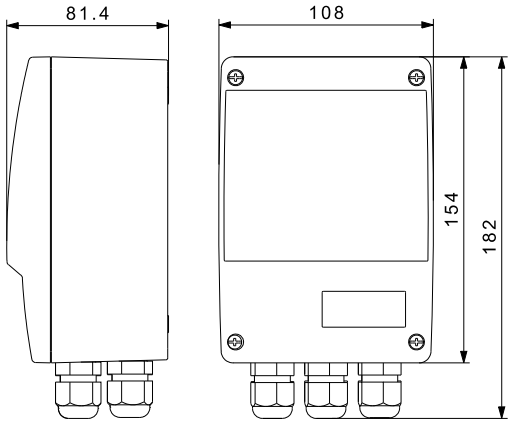

TM 05 6100 4512

Fig. 22 Dimensions (stated in mm), CIU 903

IO 50 SQFlex switch box

The IO 50 is designed specifically for solar-powered SQFlex systems.

The IO 50 enables manual starting and stopping of the pump in an SQFlex Solar system, and functions as a connection box joining all necessary cables.

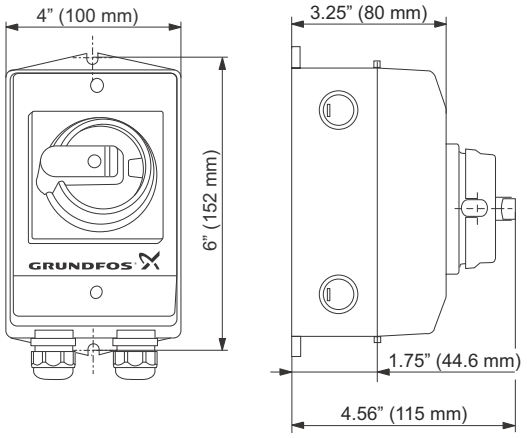

Fig. 23 Dimensions, IO 50

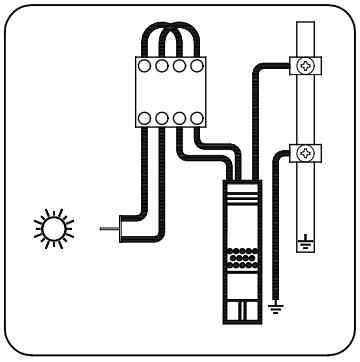

Fig. 24 Wiring diagram, IO 50

IO 101 SQFlex switch box

The IO 101 is designed specifically for solar-powered SQFlex systems.

The IO 101 enables the connection of a backup generator in case of insufficient solar energy. The switching between solar power and generator must be made manually.

In case the generator is stopped manually or runs out of fuel, the IO 101 automatically changes over to the solar panels.

The IO 101 functions as a connection box joining all necessary cables.

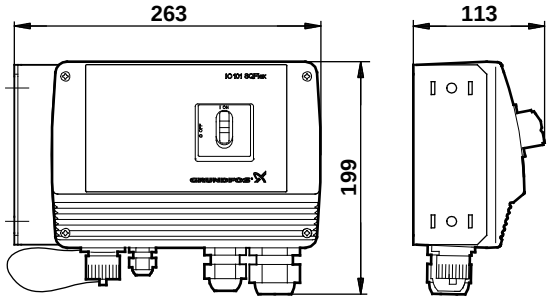

Fig. 25 Dimensions (stated in mm), IO 101

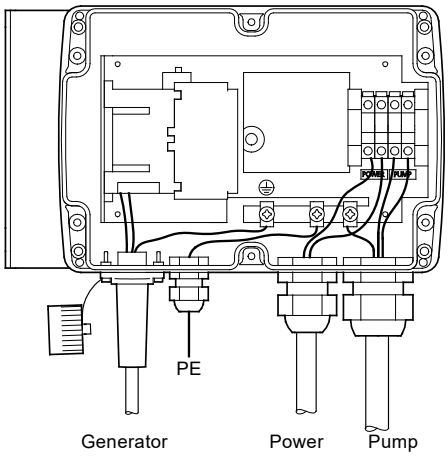

Fig. 26 Electrical connections, IO 101

IO 102 SQFlex breaker box

The IO 102 is designed specifically for wind-powered SQFlex systems.

The IO 102 enables manual starting and stopping of the pump in an SQFlex Wind system or an SQFlex Combi system.

The ON/OFF switch has a built-in "electrical brake" for the turbine. When the switch is in OFF position, the turbine stops or slows down.

The IO 102 rectifies the three-phase AC voltage from the wind turbine into DC voltage. Furthermore, it enables the combination of wind energy from the wind turbine and solar energy from the solar panels.

The IO 102 functions as a connection box joining all necessary cables.

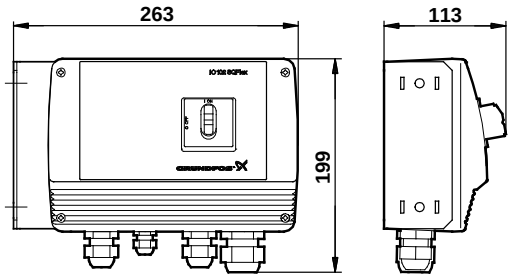

Fig. 27 Dimensions (stated in mm), IO 102

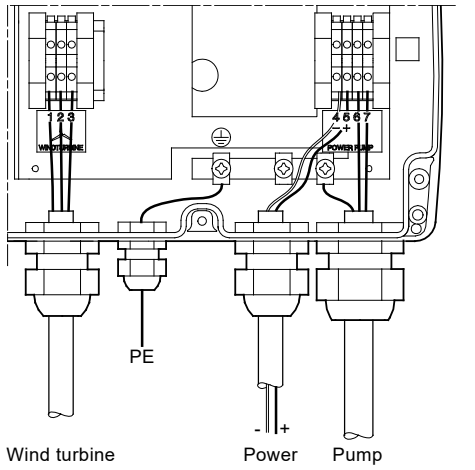

Fig. 28 Electrical connections, IO 102

Charge controller

The charge controller is used when a battery backup system is installed with an SQFlex pumping system. These systems are typically used in applications where the pump is not running during most of the peak sun hours of the day, or where it is impossible or impractical to store large volumes of water. Examples include remote homes or cabins, automatic livestock waterers, and very low-yielding wells.

The charge controller is a fully automatic battery charger, and the only setting required is the selection of battery type.

There are three battery types available:

- gel battery
- sealed battery
- flooded battery.

The charge controller enables manual disconnection of the pump, the solar modules, or both, at the same time.

Wind turbine

The wind turbine should have a working voltage range of 30 to maximum 220 VAC, single- or three-phase.

The IO 102 functions as a breaker box and must be included in SQFlex Wind systems.

Note: The IO 102 must be ordered separately.

Generator

The generator can be either diesel- or petrol-driven.

The generator must be running steadily before the pump is started.

5. System sizing

Sizing of SQFlex system

Grundfos has developed an online-based sizing tool enabling the sizing of SQFlex systems.

See *Grundfos Product Center* on page 51. The sizing tool covers both solar- and wind-powered systems.

The following three parameters must be known for sizing the optimum SQFlex system:

- location of installation
- maximum head required
- quantity of water required.

With respect to sizing of a correct solar-powered SQFlex system, there are six regions:

- North America
- South America
- Australia and New Zealand
- Asia and the Pacific
- Southern Africa
- Europe, Middle East and Northern Africa.

Each region is divided into a number of zones according to the solar radiation per day in kWh/m^2.

Voltage effect on pump efficiency

The pump efficiency can vary quite a bit depending on input voltage. This chart shows the dropoff in efficiency as the voltage gets lower. For example, if you have two systems with the exact same wattage rating, but System A is running at 120V and System B is running at 35V, System A will produce 20 % more water than System B.

SQ Flex optimal efficiency	
Panel output voltage	**(% loss in gallons/day)**
120 V - 300 V	- 0 %
90 V	- 5 %
60 V	- 10 %
35 V	- 20 %

Solar panel wiring

Methods of solar panel wiring

Solar panels can be connected in one of three methods:

1. Series wiring
2. Parallel wiring
3. Series/parallel wiring (a combination of the two)

The Grundfos SQFlex pump is most efficient at voltages of 120 V and above, up to a maximum of 300 V. To maximize pump performance, connect panels to obtain at least 120 V.

Series wiring

All solar panels have a negative (-) and a positive (+) terminal.

When wiring panels in series, voltages add and amperage stays the same.

To wire panels in series, connect the positive terminal of one panel to the negative terminal of the next panel.

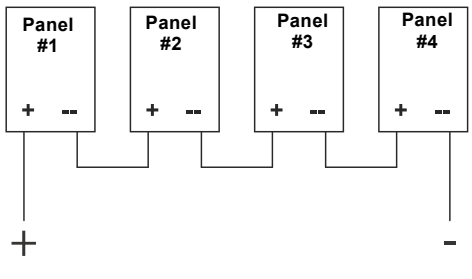

Fig. 29 Solar panel wiring in series

Panel voltages add in series, so if the panels in figure 29 are rated at 70V (GF100), then the total voltage will be:

70 + 70 + 70 + 70 = 280 V

Panel amperage remains the same, so if each panel produces 1.43 amps, then the total current will be 1.43 amps.

Panel wattage always adds, so if each panel is rated at 100 W the total wattage (Watts = Volts x Amps) output will be:

100 + 100 + 100 + 100 = 400 W

Parallel wiring

When wiring panels in parallel, results are the opposite of series wiring, that is, amperages add and voltage stays the same.

To wire panels in parallel, connect the positive terminal of each panel to the positive terminal of the other panels, and the negative terminal of each panel to the negative terminal of the other panels.

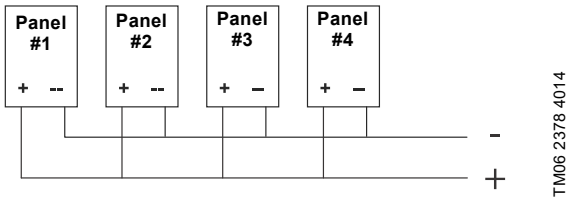

Fig. 30 Solar panel wiring in parallel

Panel voltage remains the same, so if the panels in figure 30 produce 70 V each, then the total output will be 70 V.

Panel amperage adds in parallel, so if the panels in figure 30 are rated at 1.43 A, then the total current will be:

1.43 + 1.43 + 1.43 + 1.43 = 5.72 A

Panel wattage always adds, so if each panel is rated at 100W the total wattage (Watts = Volts x Amps) output will be:

100 + 100 + 100 + 100 = 400 W

Series/parallel circuits

A series/parallel circuit is simply two or more series circuits that are wired together in parallel.

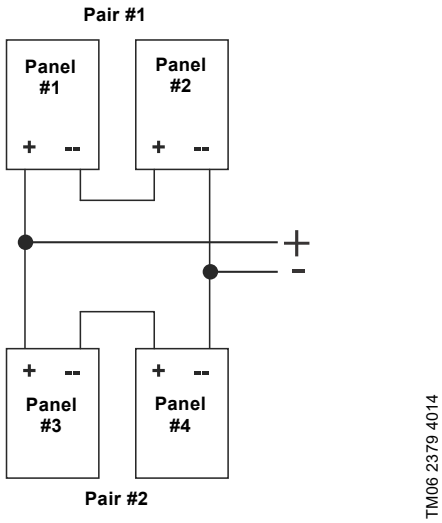

Solar panel wiring in series/parallel circuit

In figure , two separate pairs of panels have been wired in series, and each of these series pairs have been wired together in parallel.

To determine the total voltage and amp output of this array, consider first each pair of panels wired in series. Think of each pair as a single panel. Each panel has a rating of 70V, 1.43A and 100W. Remember that in series, voltage adds, while amperage remains the same. Pair #1 provides 70 plus 70 equals 140 V and 1.43 A. Pair #2 provides the same.

Now add the two pairs in parallel. Remember in parallel, voltage remains the same and amperage adds. Each pair produces 140 V, so the total voltage equals to 140 V. Each pair produces 1.43 A, so the total amperage is 1.43 plus 1.43 equals 2.86 A. Watts always add, so 4 times 100 W equals 400 W.

Sizing of cable

Use the following formula:

$$L = \frac{\Delta P \times q \times V_{mp}^2}{Wp \times 100 \times 2 \times \rho} [m]$$

L = length of cable [m]

ΔP = power loss [%]

q = cross-section of submersible drop cable [mm^2]

V_{mp} = maximum power voltage [V]

Wp = Watt peak [Wp]

ρ = specific resistance: 0.0173 [$\Omega\ mm^2/m$]

See *Grundfos Product Center* on page 51. The sizing tool makes it possible to calculate the exact losses.

6. Performance curves

SQF 0.6-2

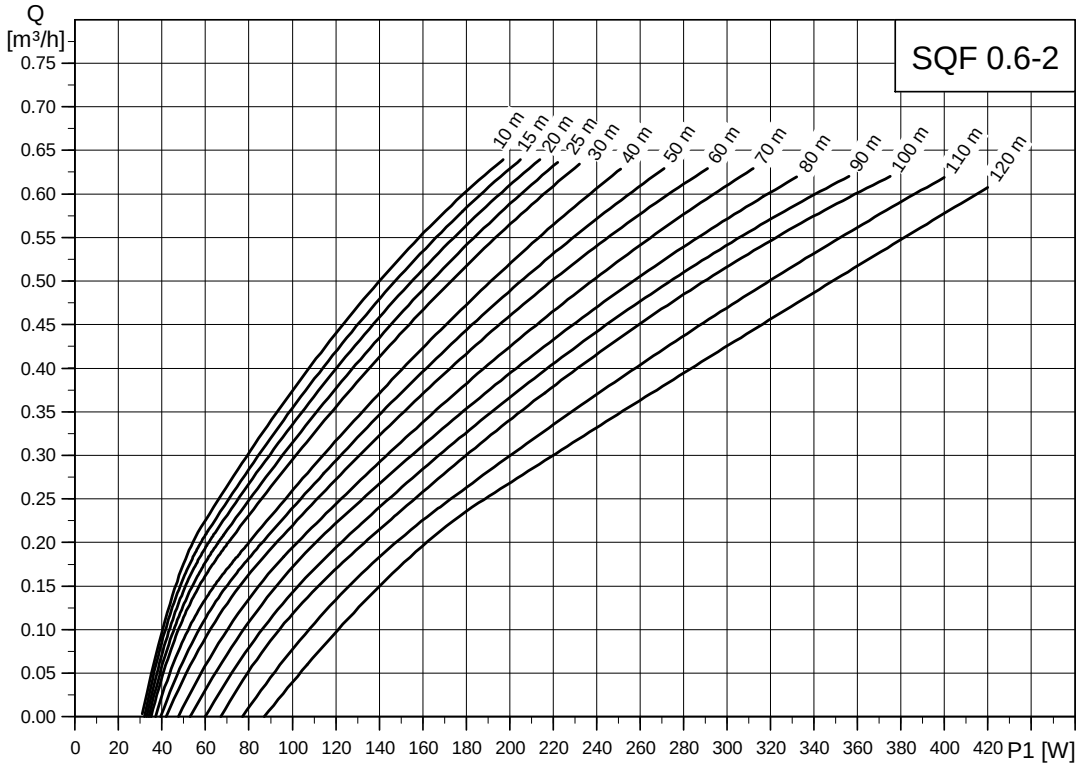

TM02 2338 4107

SQF 0.6-3

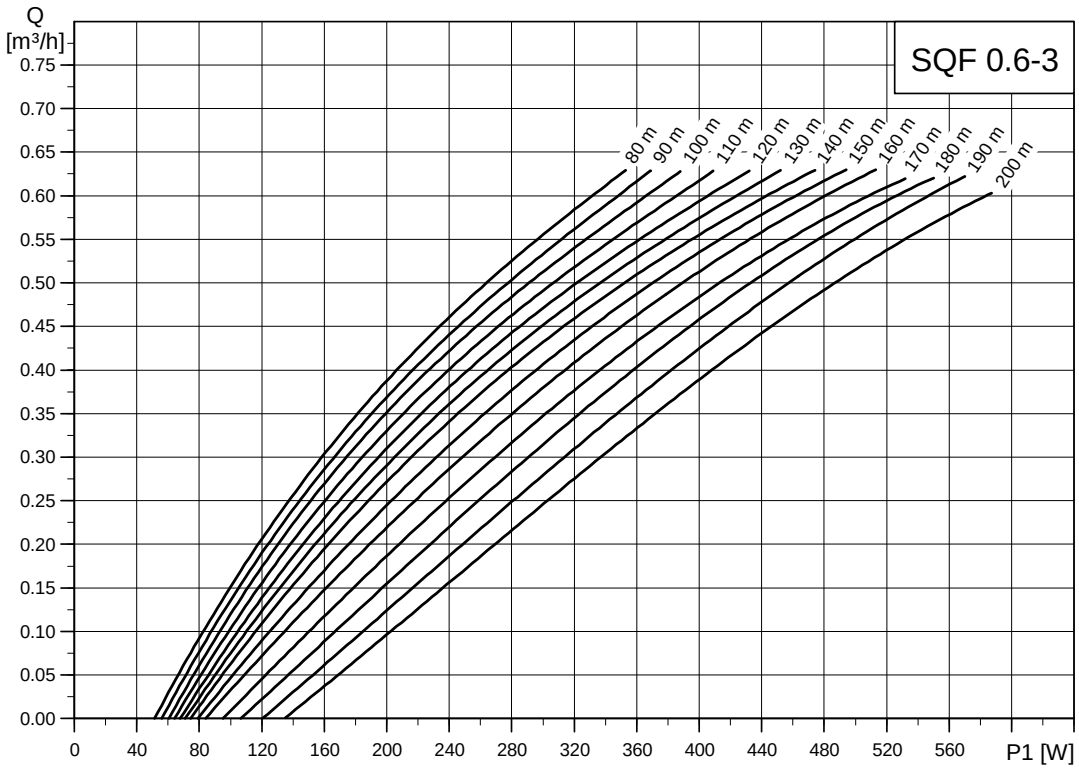

TM03 3926 4107

SQF 1-30

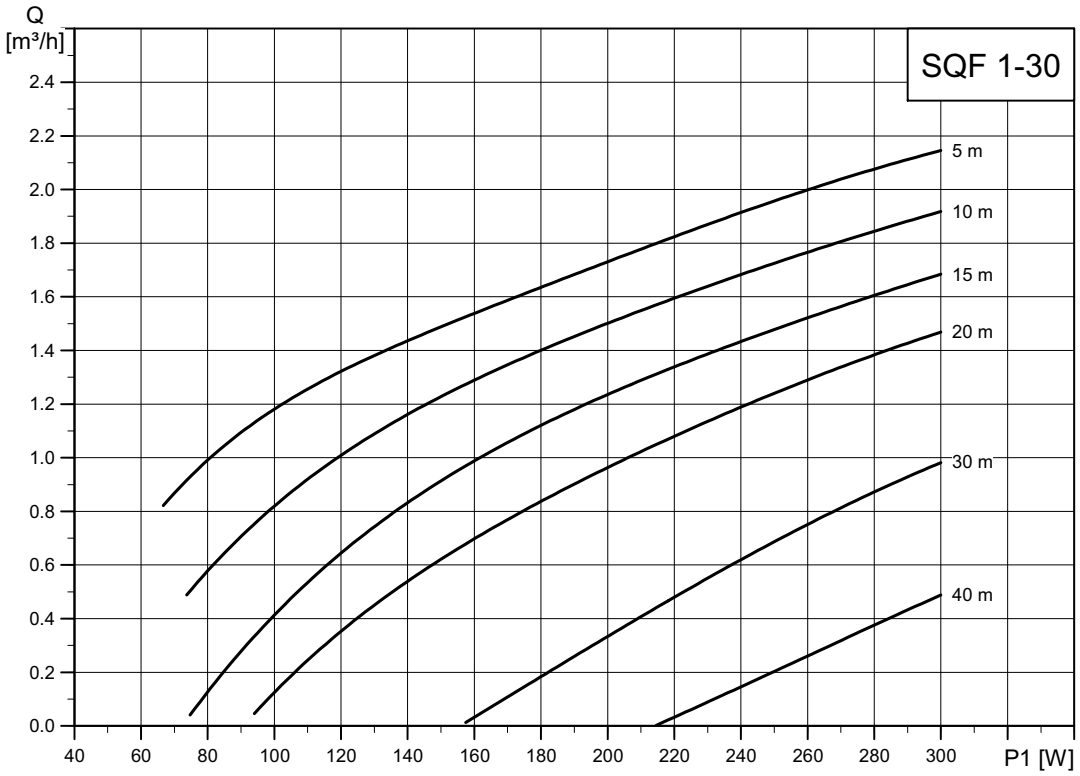

TM06 8847 1217

SQF 1-70

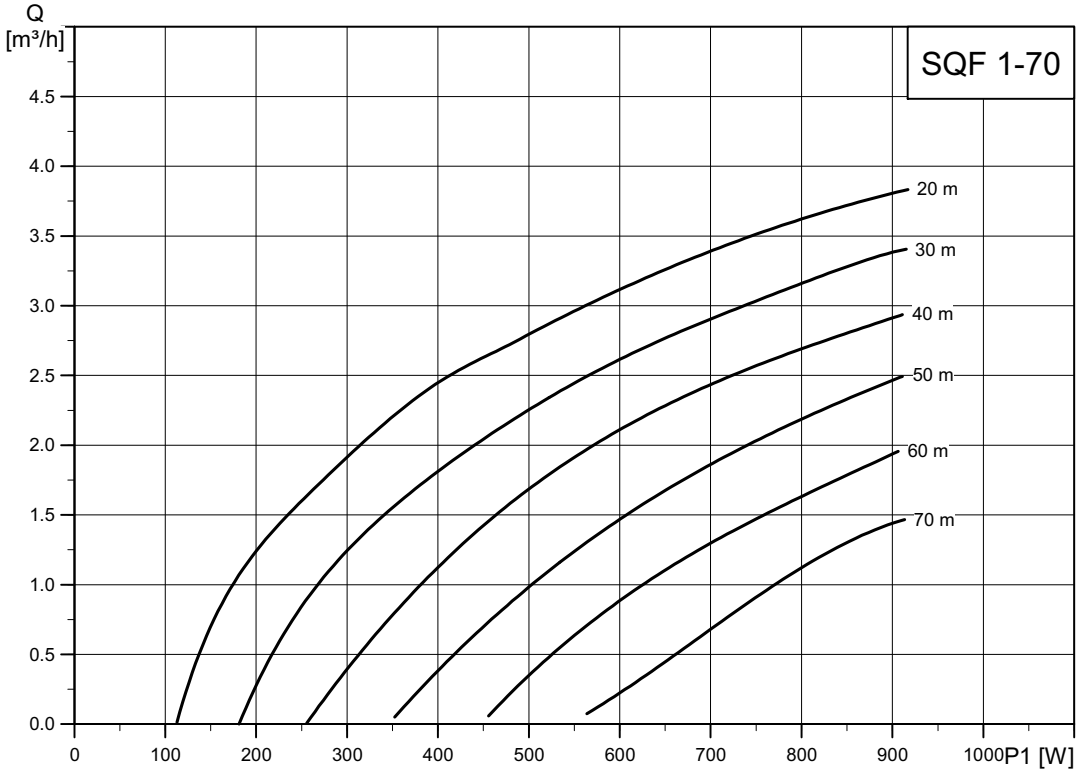

TM07 8120 492020

SQF 1.2-2

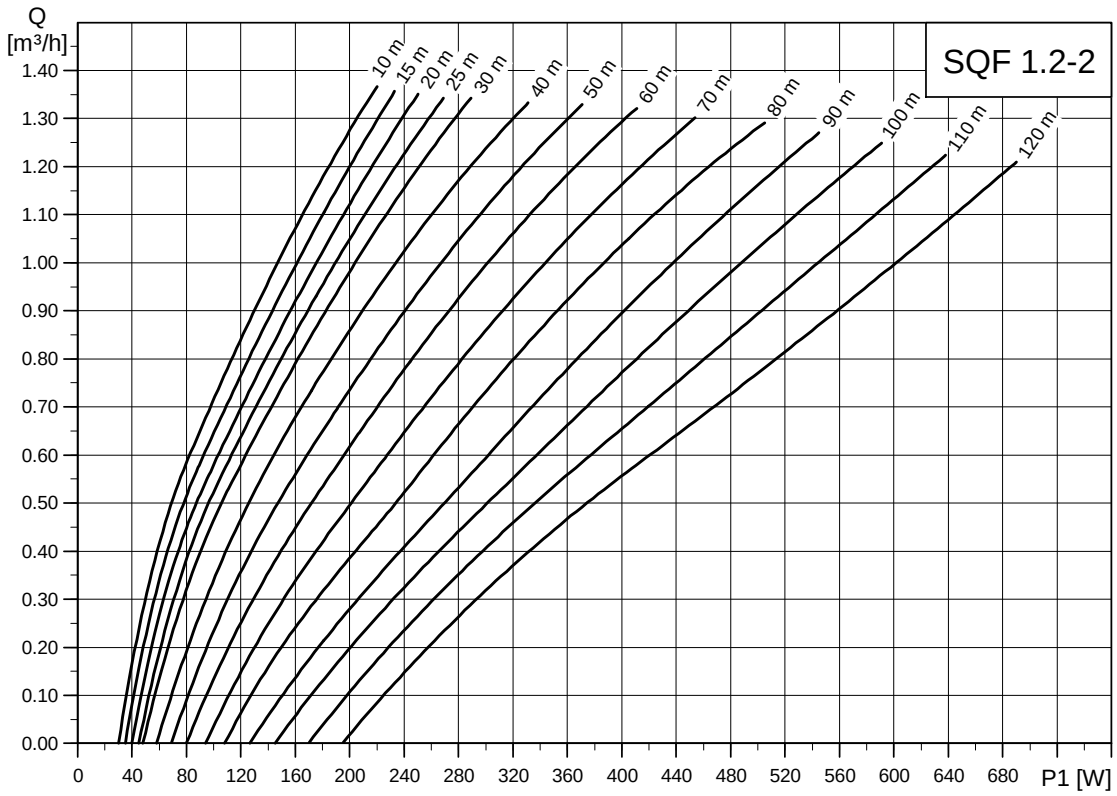

TM02 2339 4107

SQF 1.2-3

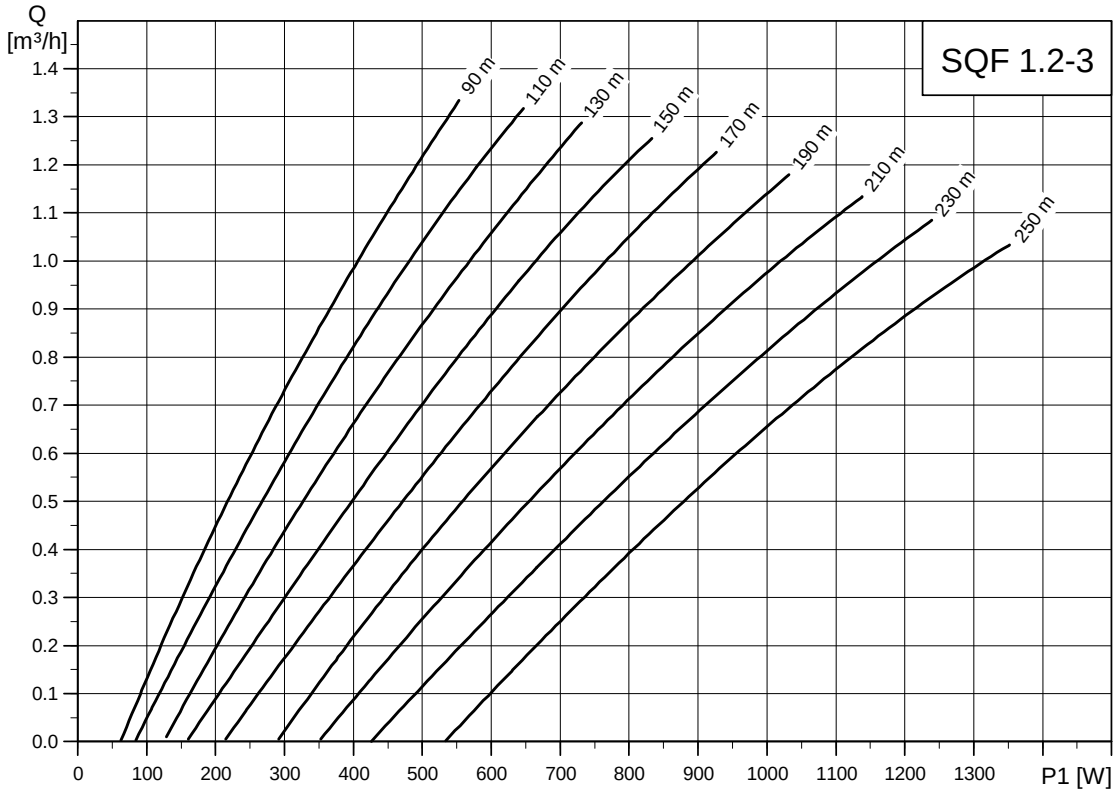

TM04 4606 1709

SQF 2.5-2

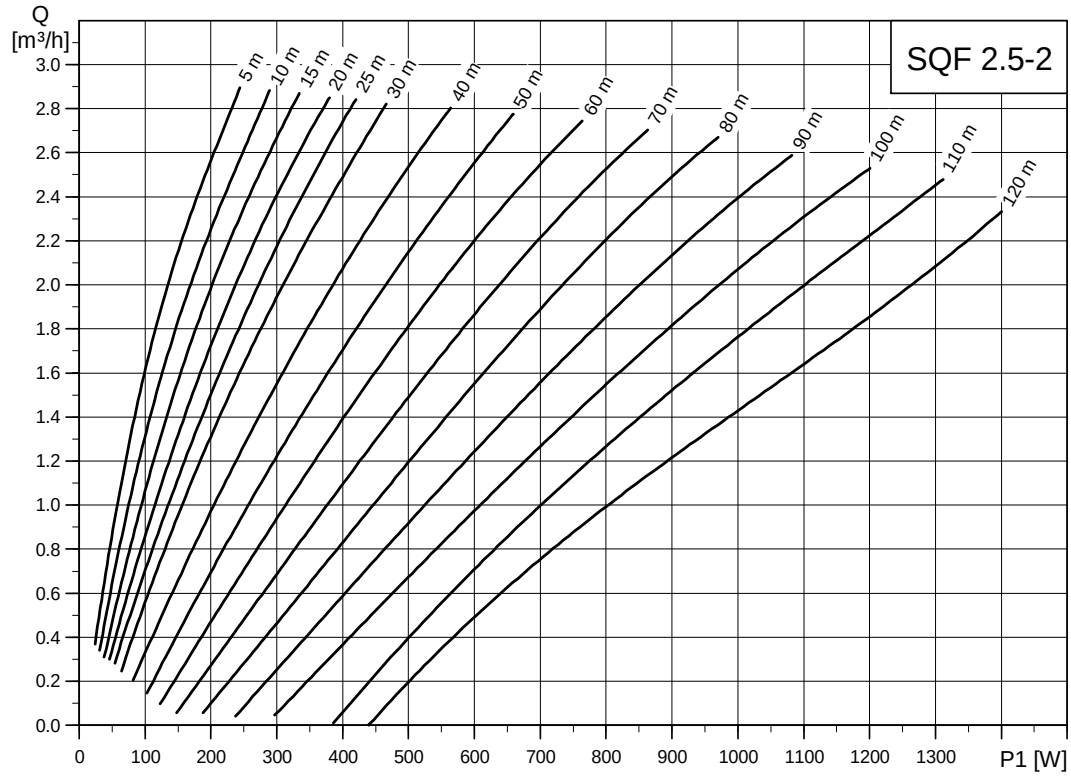

TM02 2340 2409

SQF 3A-10

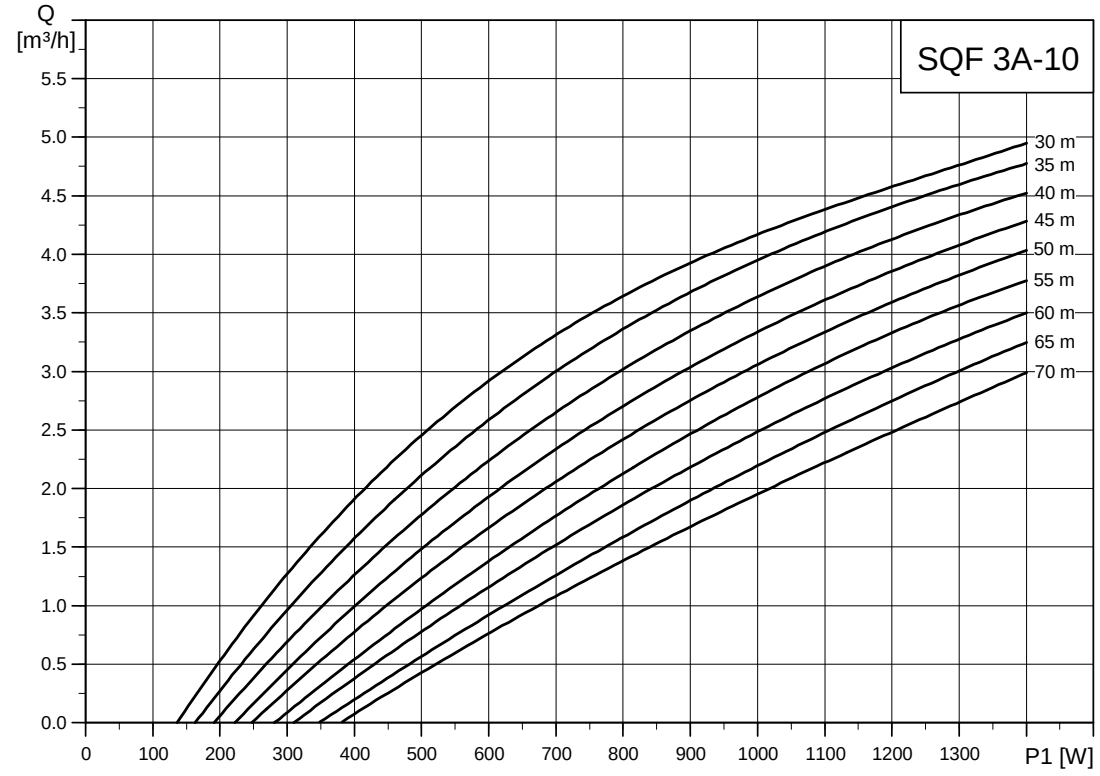

TM03 3927 1206

SQF 3-105

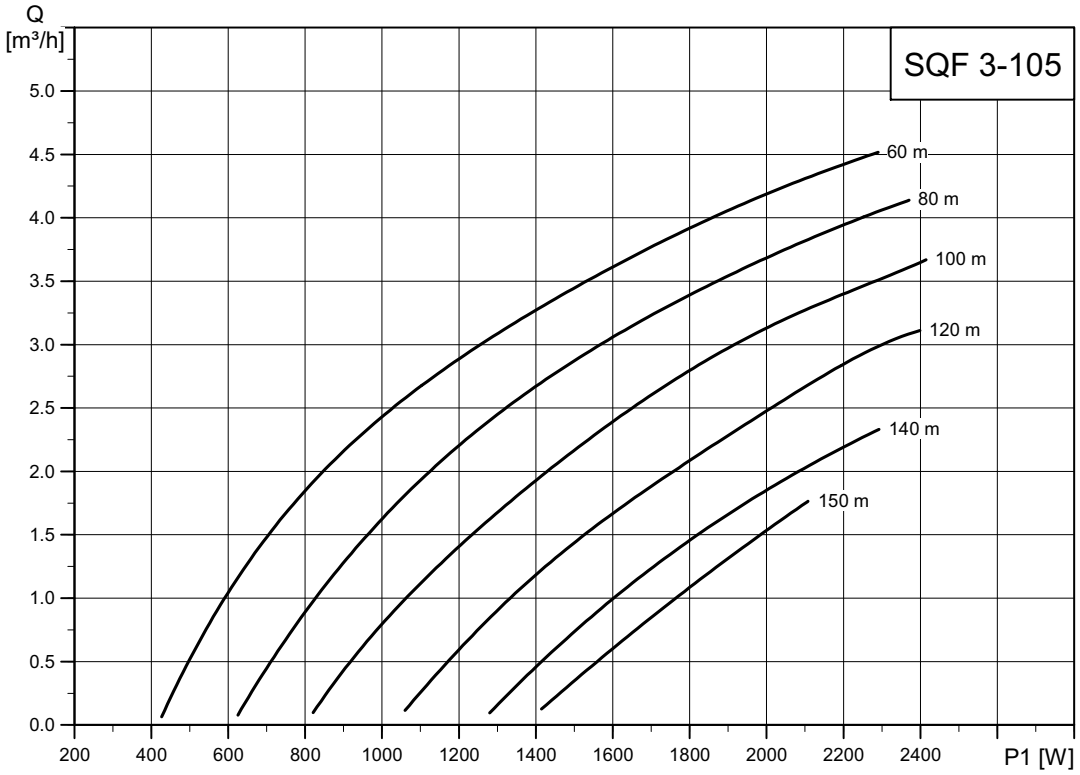

TM07 8118 492020

SQF 5A-3

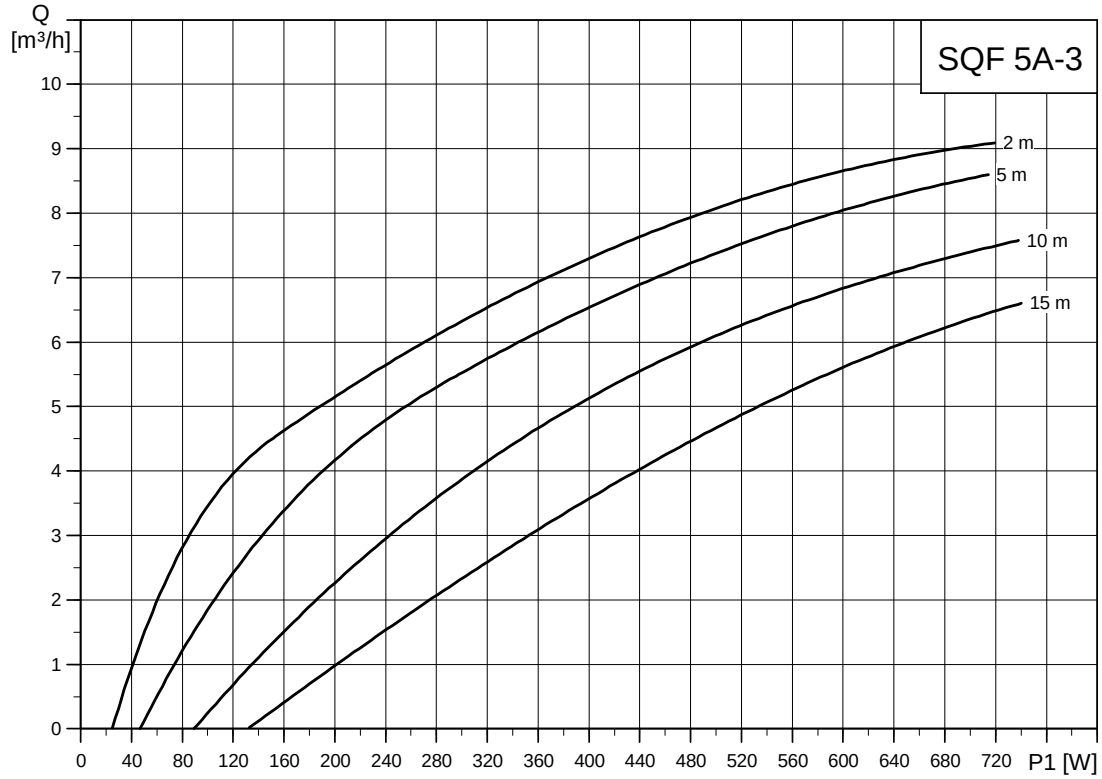

TM02 2341 4107

SQF 5A-7

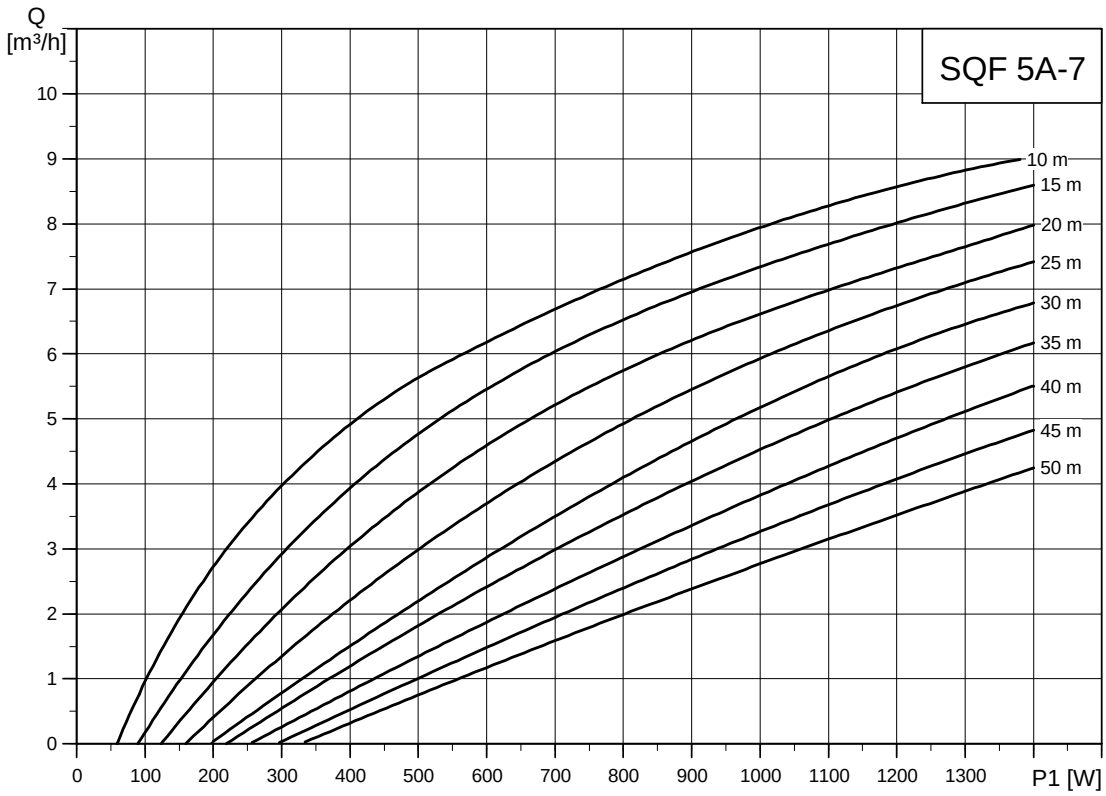

TM02 2342 4107

SQF 5-70

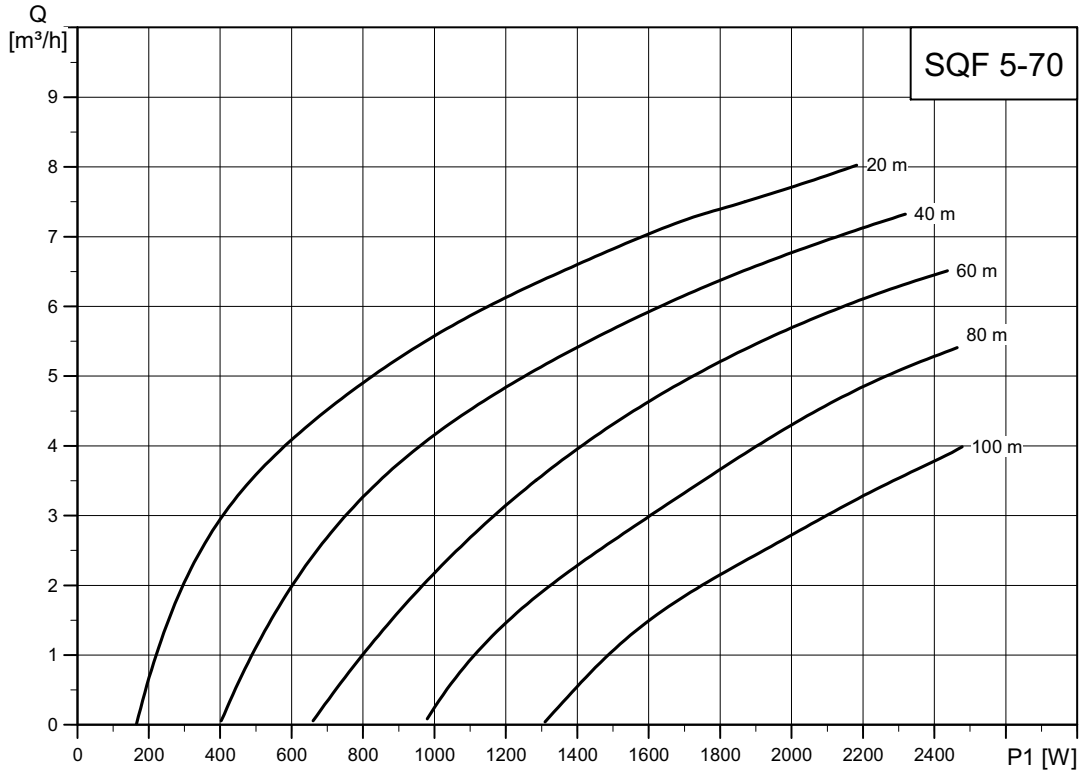

TM07 8117 492020

SQF 7-4

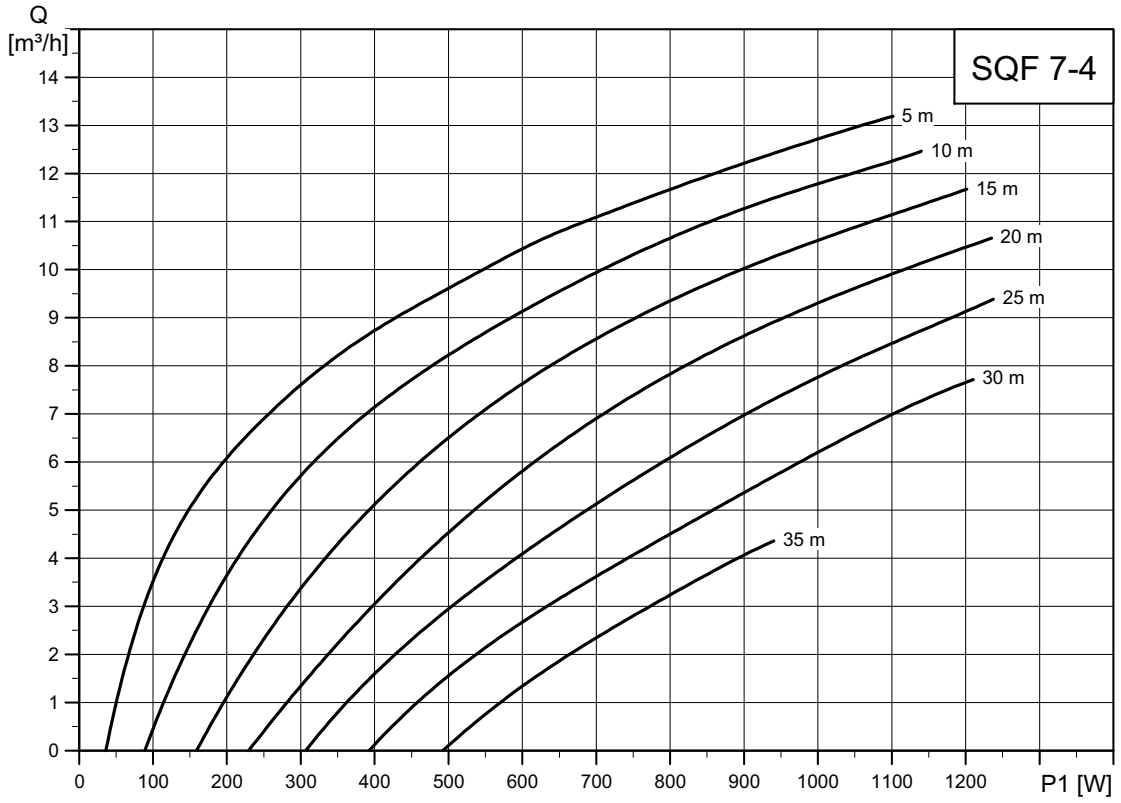

TM02 2343 5006

SQF 7-55

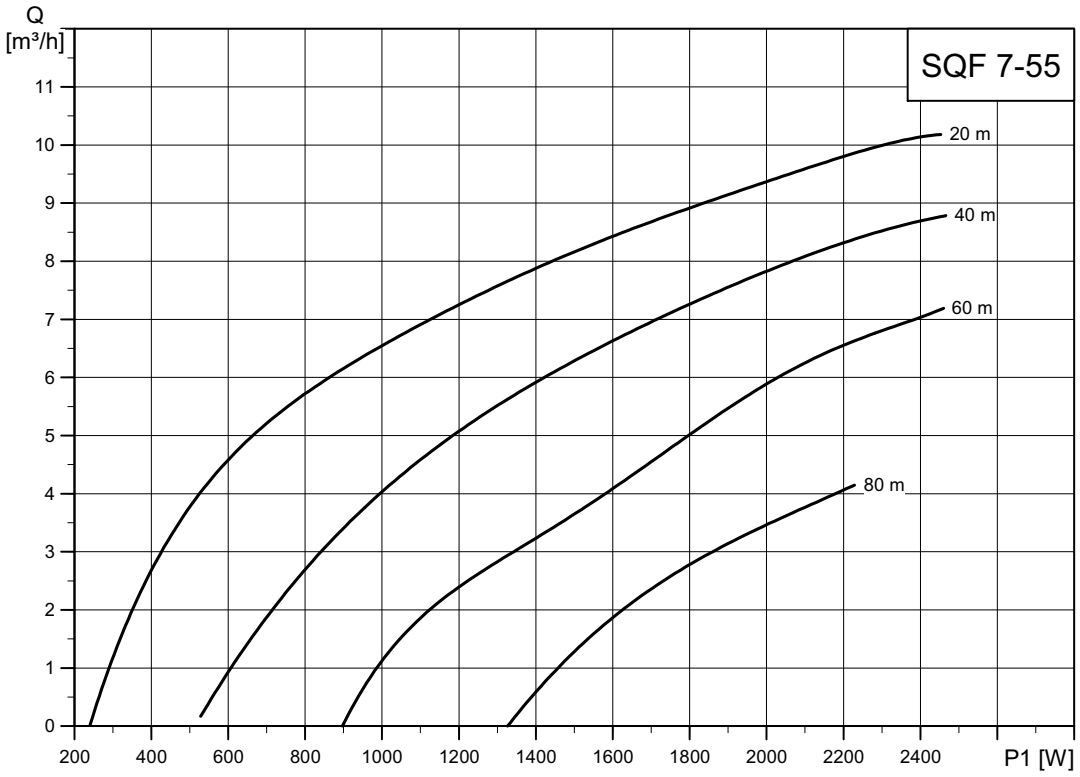

TM07 8119 492020

SQF 9-3

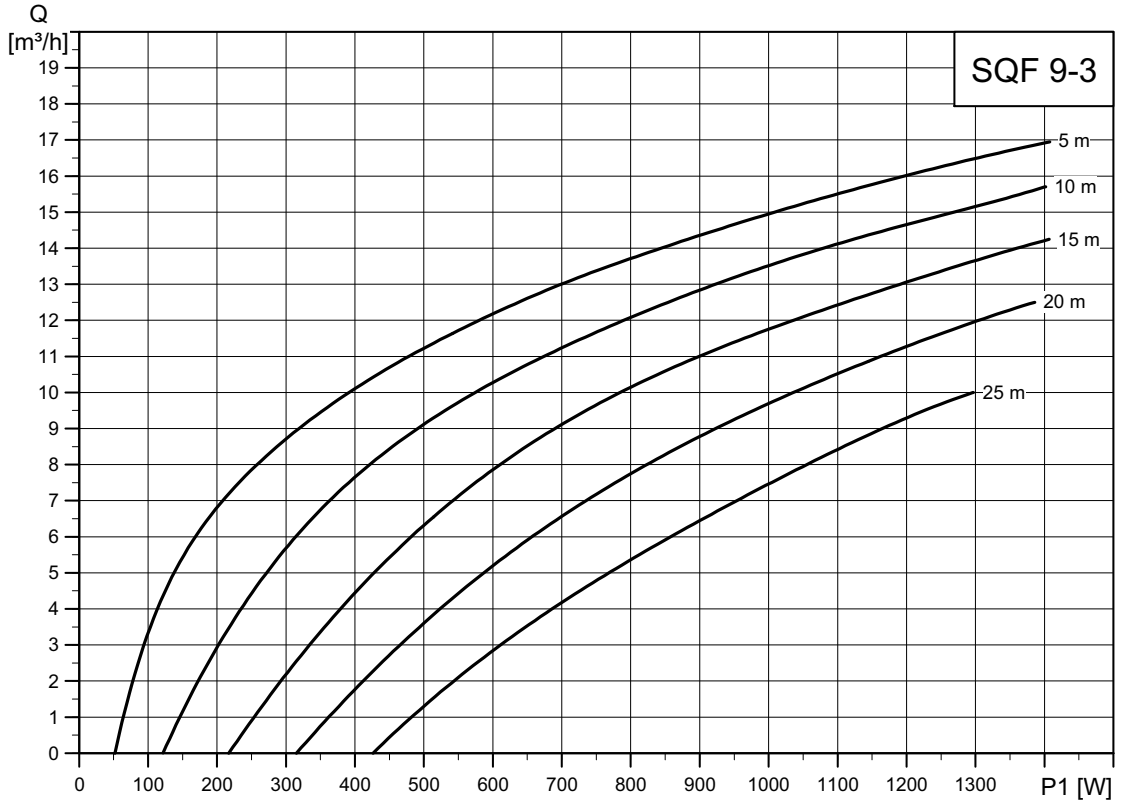

TM03 3928 1206

SQF 14-3

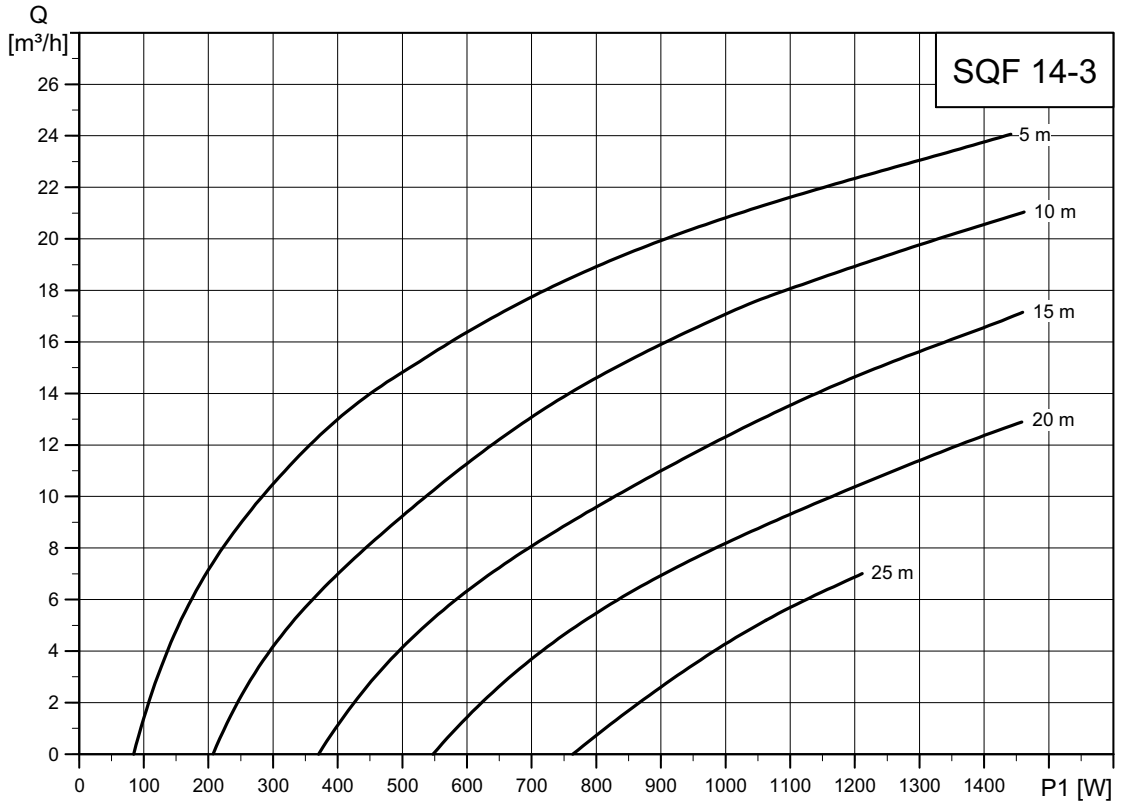

TM03 3929 1206

EuP ready

The SQFlex centrifugal pumps (SP A) are energy-optimised and comply with EuP Directive (Commission Regulation (EC) No 547/2012) which took effect on 1 January 2013. As of this date, all pumps are classified in a new energy efficiency index (MEI).



MEI index

Minimum Efficiency Index (MEI) means the dimensionless scale unit for hydraulic pump efficiency at best efficiency point (BEP), part load (PL) and overload (OL). Regulation in EU sets efficiency requirements to MEI > 0.1 as of 1 January 2013, and MEI > 0.4 as of 1 January 2015. An indicative benchmark for the best-performing water pumps available on the market in 2012 is MEI ≥ 0.70.

Efficiency and MEI index for SQFlex centrifugal (SP A) pumps

Pump type	Pump size	Efficiency [%]	MEI
SQF3A-10	4"	58	≥ 0.70
SQF5A-3	4"	60	≥ 0.56
SQF5A-7	4"	60	≥ 0.56
SQF7-4	4"	69	≥ 0.70
SQF9-3	4"	71	≥ 0.70
SQF14-3	4"	70	≥ 0.44

For more information about the new energy directive, visit energy.grundfos.com.

7. Technical data

Dimensions and weights

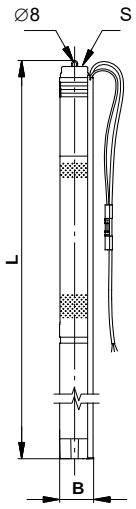

Pump type	Dimensions [mm]			Minimum borehole [mm]*	Net weight [kg]*
	L	B	S		
SQF 0.6-2 (N)	1185	74	RP 1 1/4	76	7,6
SQF 0.6-3 (N)	1235	74	RP 1 1/4	76	7,9
SQF 1-30 (N)	990	74	RP 1 1/4	76	6,5
SQF 1-70 (N)	861	74	RP 1 1/4	76	6,3
SQF 1.2-2 (N)	1225	74	RP 1 1/4	76	9,7
SQF 1.2-3 (N)	1295	74	RP 1 1/4	76	10
SQF 2.5-2 (N)	1247	74	RP 1 1/4	76	10
SQF 3A-10 (N)	968/1012	101	RP 1 1/4	104	11/12,6
SQF 3-105 (N)	942	74	RP 1 1/4	76	6,5
SQF 5A-3 (N)	821/865	101	RP 1 1/2	104	9,6/10,8
SQF 5A-7 (N)	905/949	101	RP 1 1/2	104	10,3/10,7
SQF 5-70 (N)	941	74	RP 1 1/2	76	6,4
SQF 7-4 (N)	927	101	RP 1 1/2	104	12,5
SQF 7-55 (N)	860	74	RP 1 1/2	76	6,1
SQF 9-3 (N)	1011	101	RP 2	104	12,1
SQF 14-3 (N)	982	101	RP 2	104	12,7

Electrical data

Pump type	Motor type	DC Voltage [VDC]	AC Voltage [VAC]	Speed [RPM]	Maximum power input P1 [W]	Maximum current [A]
SQF 0.6-2 (N)	MSF 3 (N)	30-300	90-240	3600	1400	8.4
SQF 0.6-3 (N)	MSF 3 (N)	30-300	90-240	3600	1400	8.4
SQF 1-30 (N)	MSF 3 (N)	30-300	90-240	10700	300	8.4
SQF 1.2-2 (N)	MSF 3 (N)	30-300	90-240	10700	1000	8,4
SQF 1-70 (N)	MSF 3 (N)	30-300	90-240	3600	1400	8.4
SQF 1.2-3 (N)	MSF 3 (N)	30-300	90-240	3600	1400	8.4
SQF 2.5-2 (N)	MSF 3 (N)	30-300	90-240	3600	1400	8.4
SQF 3A-10 (N)	MSF 3 (N)	30-300	90-240	3600	1400	8.4
SQF 3-105 (N)	MSF 3 (N)	100-300	90-240	10700	2500	12
SQF 5A-3 (N)	MSF 3 (N)	30-300	90-240	3600	1400	8.4
SQF 5A-7 (N)	MSF 3 (N)	30-300	90-240	3600	1400	8.4
SQF 5-70 (N)	MSF 3 (N)	100-300	90-240	10700	2500	12
SQF 7-4 (N)	MSF 3 (N)	30-300	90-240	3600	1400	8.4
SQF 7-55 (N)	MSF 3 (N)	100-300	90-240	10700	2500	12
SQF 9-3 (N)	MSF 3 (N)	30-300	90-240	3600	1400	8.4
SQF 14-3 (N)	MSF 3 (N)	30-300	90-240	3600	1400	8.4

SQF pump

Run-up time	The run-up time depends on the energy source.
Start/stop	There is no limitation to the number of starts/stops per hour.
Enclosure class	IP68
Motor protection	The built-in motor protection ensures protection against the following: • dry running (water level electrode) • overvoltage and undervoltage • overload • overtemperature.
Conductivity	≥ 70 µs/cm (micro siemens)
Sound pressure level	The sound pressure level of the pump is lower than the limiting values stated in the EC Machinery Directive.
Radio noise	The SQF complies with the EMC Directive 89/336/EEC and it has been tested according to the standards EN 61000-6-2 and EN 61000-6-3.
Reset function	The SQF can be reset via the CU 200, or by disconnecting the power supply for 1 minute.
Power factor	PF = 1
Operation via generator	We recommend that the generator output is equal to the motor input power (P1) plus 50 %, and at least (P1) plus 10 %.
Earth-leakage circuit breaker	If the pump is connected to an electric installation where an earth-leakage circuit breaker (ELCB) is used as an additional protection, this circuit breaker must trip when earth fault currents with DC content (pulsating DC) occur.
Installation depth	The pump must be completely submerged in the pumped liquid. The maximum installation depth must be 150 m below the static water table (15 bar).
Suction strainer	Holes of the suction strainer: SQF 0.6 (N), SQF 1 (N), SQF 1.2 (N), SQF 2.5 (N): ∅2.3 SQF 3A (N), SQF 5A: ∅2.5 SQF 5A N, SQF 8A (N), SQF 11A (N): 4 x 20 mm.
Pumped liquids	pH 5 to 9 Sand content: up to 50 g/m^3
Marking	CE

CU 200 SQFlex control unit

Voltage	30-300 VDC, 8.4 A 90-240 VAC, 8.4 A
Power consumption	5 W
Current consumption	Maximum 130 mA
Pump cable	Maximum length between the CU 200 and the pump: 300 m Maximum length between the CU 200 and the level switch: 500 m
Backup fuse	Maximum 10 A
Radio noise	The CU 200 complies with the EMC Directive 89/336/EEC. It has been tested according to the standards EN 55014 and EN 55014-2.
Relative air humidity	95 %
Enclosure class	IP55
Ambient temperature	During operation: - 30 °C to + 50 °C During storage: - 30 °C to + 60 °C
Marking	CE
Weight	2 kg

CIU 903 SQFlex control unit

Electrical data	
Supply voltage	24-240 VAC/VDC - 10 % / + 15 %
Transient overvoltage	Category II
Frequency	0-60 Hz
Power consumption	Maximum 11 W.
Cable size	IEC: 0.2 - 4 mm^2 UL: 24-12 AWG
Recommended cable type	Screened, double twisted-pair Cross-section: 0.25 - 1 mm^2 AWG: 24-18 Maximum cable length: 1200 m / 4000 ft
Cable entry	6 x M16 ∅4-10
GENIbus connection	
Transceiver	RS-485
Protocol	GENIbus
Transmission speed	9600 bit/s
Environmental conditions	
Altitude above sea level	Maximum 2000 m
Relative air humidity	Maximum 100 %
External pollution degree	Category 3
Enclosure class	IP54 according to IEC 60529 Type 3R according to UL 50
Ambient temperature	
• During operation	
– CIU XXX	• - 20 °C to + 45 °C (- 4 °F to + 113 °F)
– CIU 250-299	• 0 °C to + 40 °C (32 °F to 104 °F) (when battery is installed)
• During storage	
– CIU XXX	• - 20 °C to + 60 °C (- 4 °F to + 140 °F)
– CIU 250-299	• - 20 °C to + 35 °C (- 4 °F to + 95 °F) (when battery is installed)
• During transportation	
– CIU XXX	• - 20 °C to + 60 °C (-4 °F to + 140 °F)
– CIU 250-299	• - 20 °C to + 35 °C (-4 °F to + 95 °F) (when battery is installed)

IO 50 SQFlex switch box

Voltage	Maximum 300 VDC, 8.4 A Maximum 265 VAC, 8.4 A
Enclosure class	IP55
Ambient temperature	During operation: - 30 °C to + 50 °C During storage: - 30 °C to + 60 °C
Marking	CE

IO 101 SQFlex switch box

Voltage	230 VAC - 15 % / + 10 %, 50/60 Hz (internal relay) Maximum 225 VDC, 8.4 A Maximum 255 VAC, 8.4 A 115 VAC - 15 % / + 10 %, 50/60 Hz (internal relay) Maximum 225 VDC, 8.4 A Maximum 125 VAC, 8.4 A
Enclosure class	IP55
Ambient temperature	During operation: - 30 °C to + 50 °C During storage: - 30 °C to + 60 °C
Marking	CE

IO 102 SQFlex breaker box

Voltage	Maximum 225 VDC, 8.4 A Maximum 265 VAC, 8.4 A
Enclosure class	IP55
Ambient temperature	During operation: - 30 °C to + 50 °C During storage: - 30 °C to + 60 °C
Marking	CE

Material specification, helical rotor pump

Pos.	Component	Material	SQF		SQF-N	
			EN/ DIN	AISI	EN/ DIN	AISI
1	Valve casing	Polyamide				
1a	Outlet chamber	Stainless steel	1.4301	304	1.4401	316
1d	O-ring	NBR				
2	Valve cup	Polyamide				
3	Valve seat	Silicone (LSR)				
6	Flange, upper	Stainless steel	1.4401	316	1.4401	316
7a	Retaining ring	Stainless spring steel	1.4301	304	1.4401	316
9	Pump stator	Stainless steel/EPDM	1.4301	304	1.4401	316
13	Pump rotor	Stainless steel	1.4401	316	1.4401	316
16	Torsion shaft	Stainless steel	1.4401	316	1.4401	316
39	Valve spring	Stainless spring steel	1.4310	310	1.4401	316
55	Sleeve	Stainless steel	1.4301	304	1.4401	316
70	Valve guide	Polyamide				
159c	Sand slinger	NBR				
	Cable guard	Stainless steel	1.4301	304	1.4401	316
	Screws for cable guard	Stainless steel	1.4401	316	1.4401	316

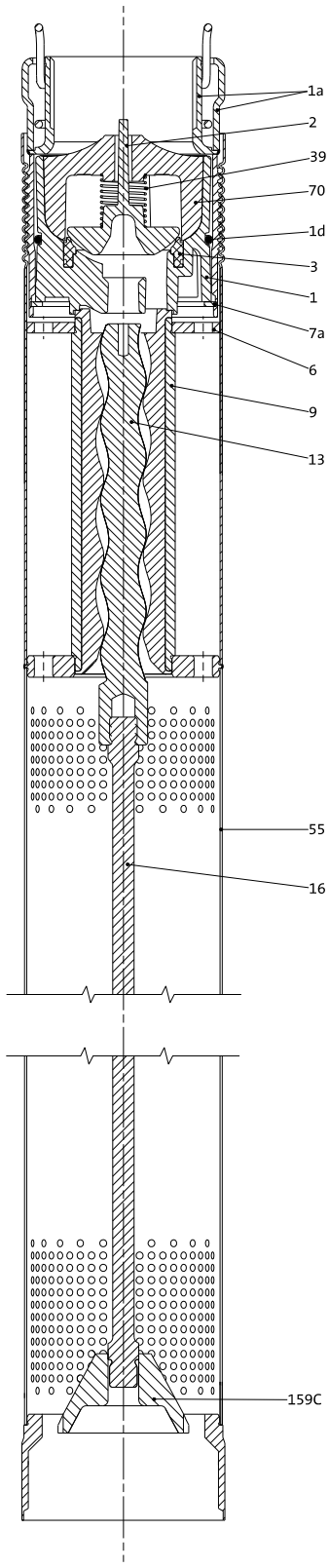

TM02 2213 2712

Fig. 31 Example: SQF 1.2-2

Material specification, 3" SQ(F) hydraulic

Pos.	Component	Material	SQF		SQF-N	
			EN/DIN	AISI	EN/DIN	AISI
1	Valve casing	Polyamide				
1a	Outlet chamber	Stainless steel	1.4301	304	1.4401	316
1d	O-ring	NBR rubber				
2	Valve cup	Polyamide				
3	Valve seat	NBR rubber				
4a	Empty chamber	Polyamide				
6	Top bearing	NBR rubber				
7	Neck ring	TPU/PBT				
7a	Lock ring	Stainless spring steel	1.4310	310	1.4404	316
7b	Neck ring retainer	Polyamide				
9b	Chamber top	Polyamide				
9c	Chamber bottom	Polyamide				
13	Impeller with tungsten carbide bearing	Polyamide				
14	Inlet interconnector	Polyamide				
14a	Ring	Stainless steel	1.4301	304	1.4401	316
16	Shaft with coupling	Stainless steel	1.4301	304	1.4401	316
		Sintered steel				
18	Cable guard	Stainless steel	1.4301	304	1.4401	316
18a	Screws for cable guard	Stainless steel	1.4401	316	1.4401	316
30	Cone for pressure equalisation	Polyamide				
32	Guide vanes	Polyamide				
39	Spring	Stainless spring steel	1.4406	316LN	1.4406	316LN
55	Pump sleeve	Stainless steel	1.4301	304	1.4401	316
64	Priming screw	Polyamide				
70	Valve guide	Polyamide				
86	Lip seal ring	NBR rubber				
87	Cone for pressure equalisation complete	Polyamide / NBR rubber				

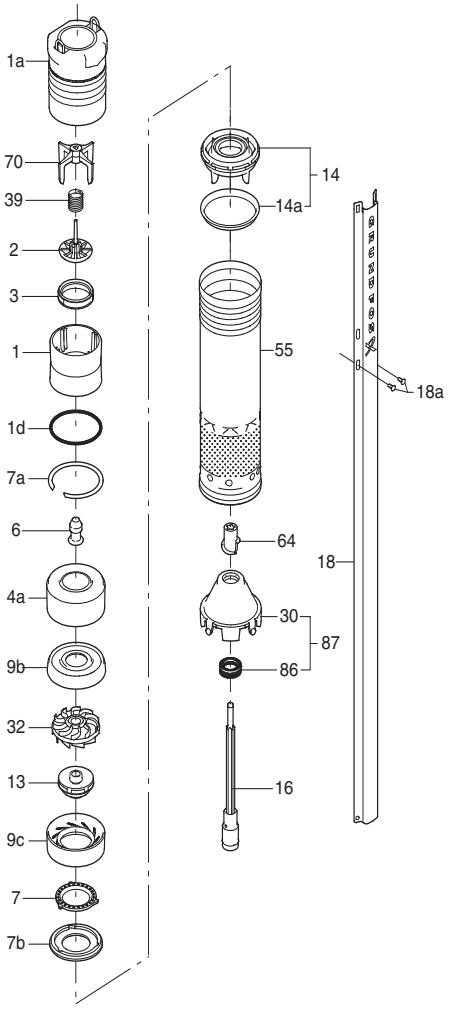

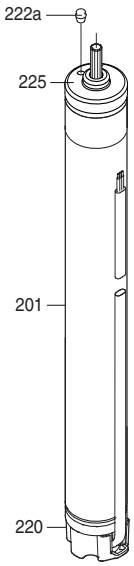

TM01 2745 0706

Fig. 32 Example SQF 1-30

Material specification, SQF 3A, SQF 5A

Pos.	Component	Material	Standard	N-version
			EN	
1	Valve casing	Stainless steel	1.4301	1.4401
2	Valve cup	Stainless steel	1.4301	1.4401
3	Valve seat	Rubber type	NBR	NBR-FKM
7	Neck ring	NBR/TPU		
8	Bearing	NBR		
	Washer for stop ring	Carbon/graphite HY22 in PTFE mass		
9	Chamber	Stainless steel	1.4301	1.4401
12	Impeller	Stainless steel	1.4301	1.4401
14	Inlet interconnector	Cast stainless steel	1.4308	1.4408
	Strainer	Stainless steel	1.4301	1.4401
16	Shaft complete	Stainless steel	1.4057	1.4460
17	Strap	Stainless steel	1.4301	1.4401
18	Cable guard	Stainless steel	1.4301	1.4401

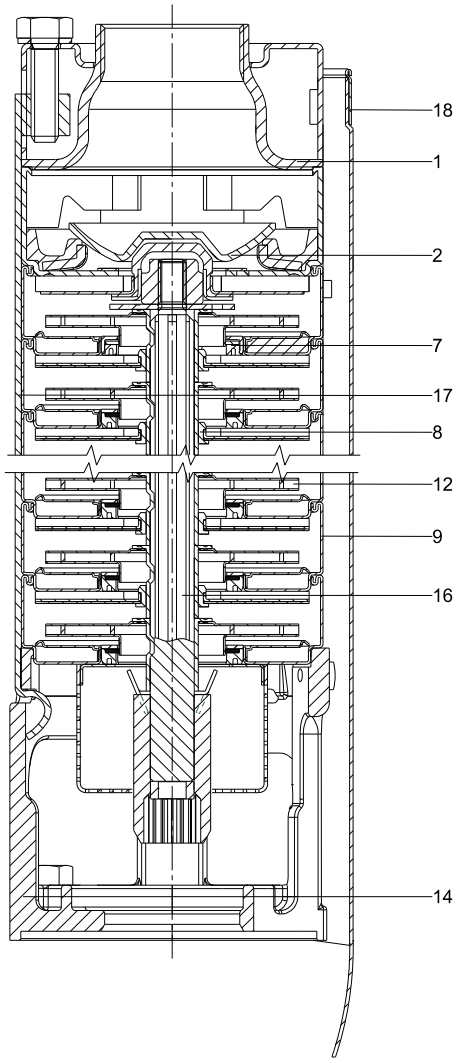

Fig. 33 Example SQF 3, pump with spline shaft

Material specification, SQF 7, SQF 9, SQF 14

Pos.	Component	Material	Standard	N-version
			EN	
1	Valve casing	Cast stainless steel	1.4301	1.4401
2	Valve cup	Cast stainless steel	1.4301	1.4401
3	Valve seat	NBR-FKM	NBR-FKM	NBR-FKM
7	Neck ring	TPU/PPS-FKM	TPU/PPS-FKM	TPU/PPS-FKM
8	Bearing	LSR/FKM	LSR/FKM	LSR/FKM
8a	Washer for stop ring	Carbon/graphite HY22 in PTFE mass		
9	Chamber	Stainless steel	1.4301	1.4401
13	Impeller	Stainless steel	1.4301	1.4401
14	Inlet interconnector	Cast stainless steel	1.4308	1.4408
15	Strainer	Stainless steel	1.4301	1.4401
16	Shaft complete	Stainless steel	1.4057	1.4460
17	Strap	Stainless steel	1.4301	1.4401
18	Cable guard	Stainless steel	1.4301	1.4401

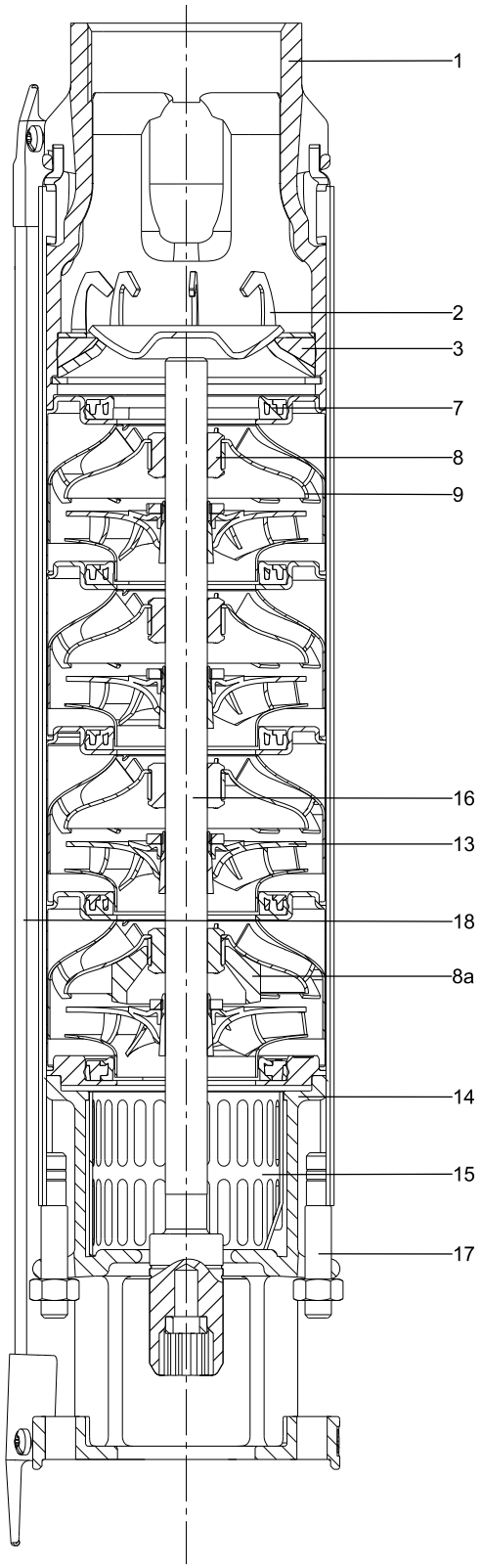

Fig. 34 Example SQF 9

Material specification, motor

MSF 3, 500-3600 RPM

Pos.	Component	Material	MSF 3		MSF 3 N	
			EN/DIN	AISI	EN/DIN	AISI
201	Stator with sleeve, complete	Stainless steel	1.4301	304	1.4401	316
202	Rotor	Stainless steel	1.4301	304	1.4401	316
202a	Stop ring	PP				
202c	Shaft end	Stainless steel	1.4401	316	1.4401	316
203	Thrust bearing, stationary	Stainless steel/carbon	1.4401	316	1.4401	316
205	Bearing plate with radial bearing	Silicon carbide	1.4301	304	1.4401	316
206	Thrust bearing, rotating	Stainless steel/ aluminium oxide Al_2O_3	1.4401	316	1.4401	316
220	Motor cable with plug					
222a	Filling plug	Silicone (LSR)				
223	Electronic unit					
224	O-ring	NBR				
225	Top cover	PPS				
232	Shaft seal	NBR				
243	Thrust-bearing housing	Stainless steel	1.4408	316	1.4408	316
	Four screws (M4)	Stainless steel	1.4401	316	1.4401	316

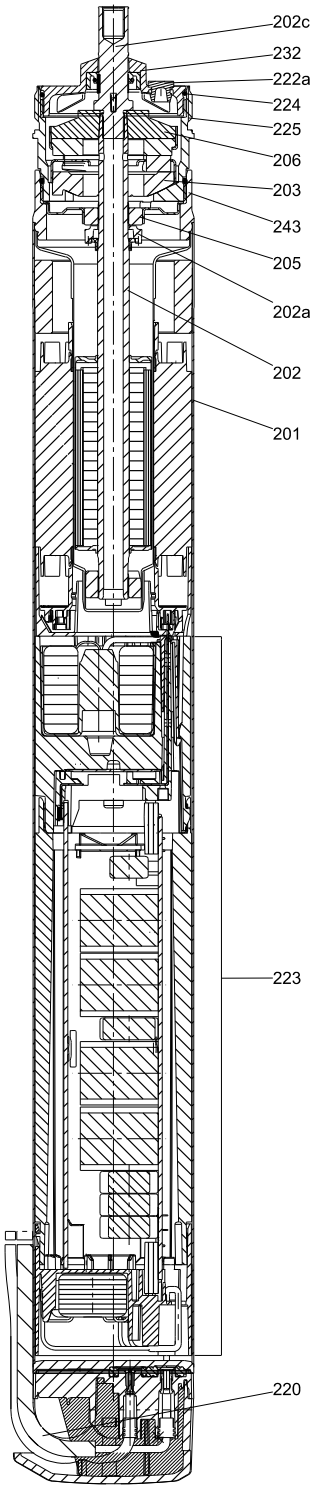

Fig. 35 Sectional drawing of motor

Material specification, motor

MSF 3, 3000-10700 RPM

Pos.	Component	Material	MSF 3		MSF 3 N	
			EN/DIN	AISI	EN/DIN	AISI
201	Stator	Stainless steel	1.4301	304	1.4401	316
202	Rotor	Stainless steel	1.4301	304	1.4401	316
202a	Stop ring	PP				
202b	Strainer	Polyester				
203	Thrust bearing, stationary	Carbon				
204	Radial bearing, lower	Silicon carbide/tungsten carbide (coating)				
205	Radial bearing, upper	Silicon carbide/tungsten carbide (coating)				
220	Motor cable with plug					
222a	Filling plug	Silicone (LSR)				
223	Electronic unit					
225	Top cover	Stainless steel	1.4301	304	1.4401	316
232	Shaft seal	NBR				
250	Four screws (M4)	Stainless steel	1.4401	316	1.4401	316

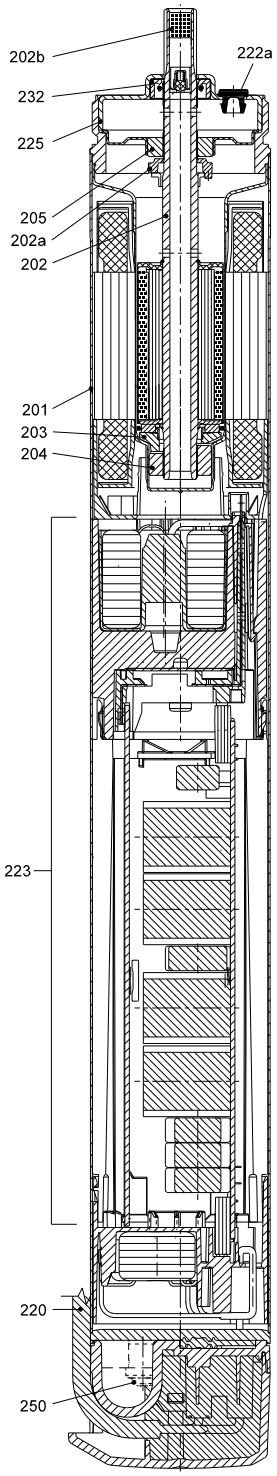

Fig. 36 Sectional drawing of motor

8. Product numbers

SQF submersible pump

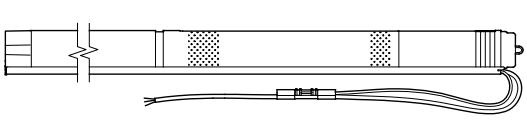

Fig. 37 SQF pump

The SQF pump is supplied with a 2-meter cable.

Pump type	Pump size	Product number	
		SQF	SQF-N
SQF 0.6-2 (N)	3"	95027324	95027325
SQF 0.6-3 (N)	3"	95027326	95027327
SQF 1-30 (N)	3"	98842452	98842517
SQF 1-70 (N)	3"	99596857	99596862
SQF 1.2-2 (N)	3"	95027328	95027329
SQF 1.2-3 (N)	3"	96834838	96834839
SQF 2.5-2 (N)	3"	95027330	95027331
SQF 3A-10 (N)	4"	95027336	95027337
SQF 3-105 (N)	3"	99858114	99858143
SQF 5A-3 (N)	4"	95027338	95027339
SQF 5A-7 (N)	4"	95027342	95027343
SQF 5-70 (N)	3"	99465250	99465255
SQF 7-4(N)	4"	98979253	98994902
SQF 7-55(N)	3"	99595409	99595431
SQF 9-3 (N)	4"	98978826	98994640
SQF 14-3 (N)	4"	98979255	98994933

CU 200 SQFlex control unit

Product	Product number
CU 200 SQFlex	96625360
CU 200 SQFlex without angle plate	98147203

CIU SQFlex (GRM) control unit

Product	Product number
CIU 903 SQFlex without GRM	98106399
CIM 280 GiC, GRM, 3G, 4G EU cellular	99439724
CIM 280 GiC, GRM, 3G, 4G US cellular	99439725
CIM 500 GRM ethernet	98301408
3G, 4G Antenna for CIM 280,	99838775
3G, 4G Antenna for CIM 260 and 280, roof mounting	99518079

IO 50 SQFlex switch box

Product	Product number
IO 50 SQFlex, metric	97907253
IO 50 SQFlex, US	96959028

IO 101 SQFlex switch box

Product	Product number
IO 101 SQFlex, 230 V	96475074
IO 101 SQFlex, 115 V	96481502

IO 102 SQFlex breaker box

Product	Product number
IO 102 SQFlex for wind turbine	96475065

9. Accessories

Solar cables

Description	Version	Length [m]	Product number
DC cable (12 AWG/3, 3 mm^2), UL-approved, for outdoor use with MC4	Array to controller (MC4)	10	98257868
	Array to array (MC4)	0.5	98257892

Level switch



TM02 2406 1806

Description	Product number
Level switch High water level: Contact is closed. Low water level: Contact is open.	16650

Pressure switch

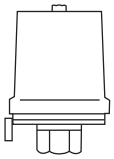

TM02 2406 1806

Description	Product number
Pressure switch	ID8952

Submersible drop cable

The submersible drop cables for SQF pumps are approved for use with potable water (KTW-approved). The cables are made of EPR (ethylene-propylene rubber).



TM00 7882 2296

Description	Version	Nominal diameter [mm]	Product number
3-core cable including earth conductor (KTW-approved)[1]	3G 1.5 mm^2 (round)	9.6 - 12.5	ID7946
	3G 2.5 mm^2 (round)	11.5 - 14.5	ID7947
	3G 4.0 mm^2 (round)	13.0 - 16.0	ID7948
	3G 6.0 mm^2 (round)	14.5 - 20.0	RM4098
	3G x 1.5 mm^2 (flat)	6.5 - 13.2	RM3952

[1] When ordering, state the length [m]

Cable termination kit, type KM

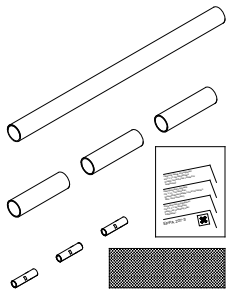

TM03 0181 4404

Description	Cross-section of conductors [mm^2]	Product number
The kit is for watertight shrink-joining of motor cable and submersible drop cable (round or flat cable). Enables the joining of: • cables of equal size • cables of different size • cable with single leads. The joint is ready for use after a few minutes, and requires no long hardening time as do resin joints. The joint cannot be separated.	1.5 - 6.0	96021473

Cable clips



TM00 7897 2296

Description	Dimensions [m]	Product number
The clips are for fastening of cable and straining wire to the riser pipe. The clips should be fitted every 3 metres. One set is enough for approximately. 45 m riser pipe.	Length: 7.5 16 buttons	115016

Straining wire



TM00 7897 2296

Description	Diameter [mm]	Product number
The wire is stainless steel EN 1.4401. It retains the submersible pump.[1]	2	ID8957

[1] When ordering, state the length in meters.

Wire clamp



TM00 7898 2296

Description	Material	Product number
Two clamps per loop	Stainless steel EN 1.4401	ID8960

Zinc anodes

Cathodic protection by means of zinc can be used for corrosion-protection of SQ/SQE pumps in chloride-containing liquids, such as brackish water and seawater.

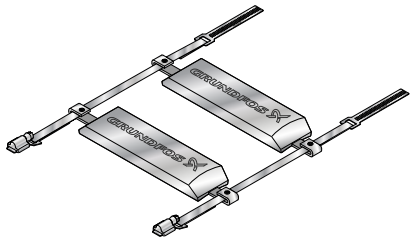

TM077621 4320

Description	Product number
Sacrificial anodes are placed on the outside of the pump and motor as protection against corrosion. The number of anodes required depends on the pump and motor in question. Typically 2 anodes are needed. Dimensions: Diameter when fitted: 125 mm. Minimum borehole diameter: 127 mm (5").	1 zinc anode: 99722879 A set of fasteners: 99812400

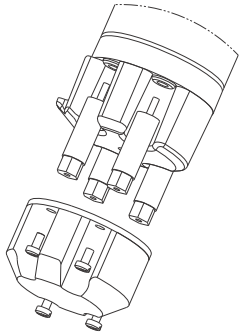

TM01 4430 0199

Description	Product number
Sacrificial anodes are placed on the bottom of the pump and motor as protection against corrosion. The number of anodes required depends on the pump and motor in question. The product number includes 1 zinc anode and 4 threaded rods. Dimensions: The zinc anode adds 55 mm to the length of the pump. Minimum borehole diameter: 76 mm (3").	99599098

Grease

Description	Product number
Grease for lubrication of motor shaft	96037562

Flow sleeve for SQFlex 3"

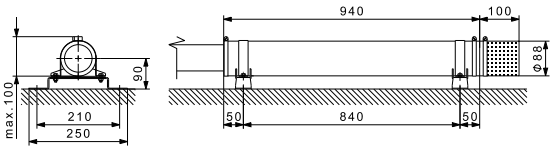

TM05 5814 4112

Description	Material	Product number
Flow sleeve including strainer and supporting bracket	Stainless steel EN 1.4301	98253259
Flow sleeve	Stainless steel EN 1.4301	98253254
Strainer	Stainless steel EN 1.4301	97943446
Supporting brackets	Stainless steel EN 1.4301	97512995

Flow sleeve 3"SQ(F) hydraulic

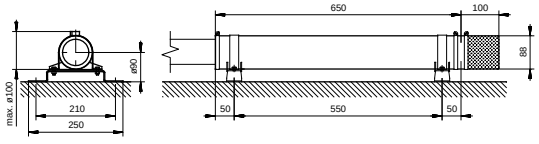

TM01 3292 3798

Description	Material	Product number
Flow sleeve including strainer and supporting bracket	Stainless steel EN 1.4301	98148594
Flow sleeve	Stainless steel EN 1.4301	97535677
Strainer	Stainless steel EN 1.4301	97943446
Supporting brackets	Stainless steel EN 1.4301	97512995

Flow sleeve for SQFlex 4"

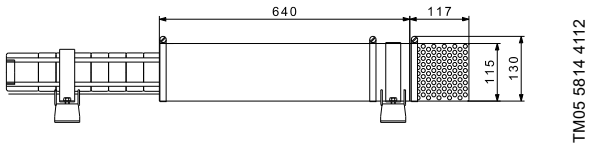

TM05 5814 4112

Description	Material	Product number
Flow sleeve including strainer and supporting bracket	Stainless steel EN 1.4301	98255476
Flow sleeve	Stainless steel EN 1.4301	98255472
Strainer	Stainless steel EN 1.4301	97943446
Supporting brackets	Stainless steel EN 1.4301	97512995

10. Grundfos Product Center

Online search and sizing tool to help you make the right choice.
http://product-selection.grundfos.com

All the information you need in one place

Performance curves, technical specifications, pictures, dimensional drawings, motor curves, wiring diagrams, spare parts, service kits, 3D drawings, documents, system parts. The Product Center displays any recent and saved items - including complete projects - right on the main page.

Downloads

On the product pages, you can download installation and operating instructions, data booklets, service instructions, etc. in PDF format.



TM07 2384

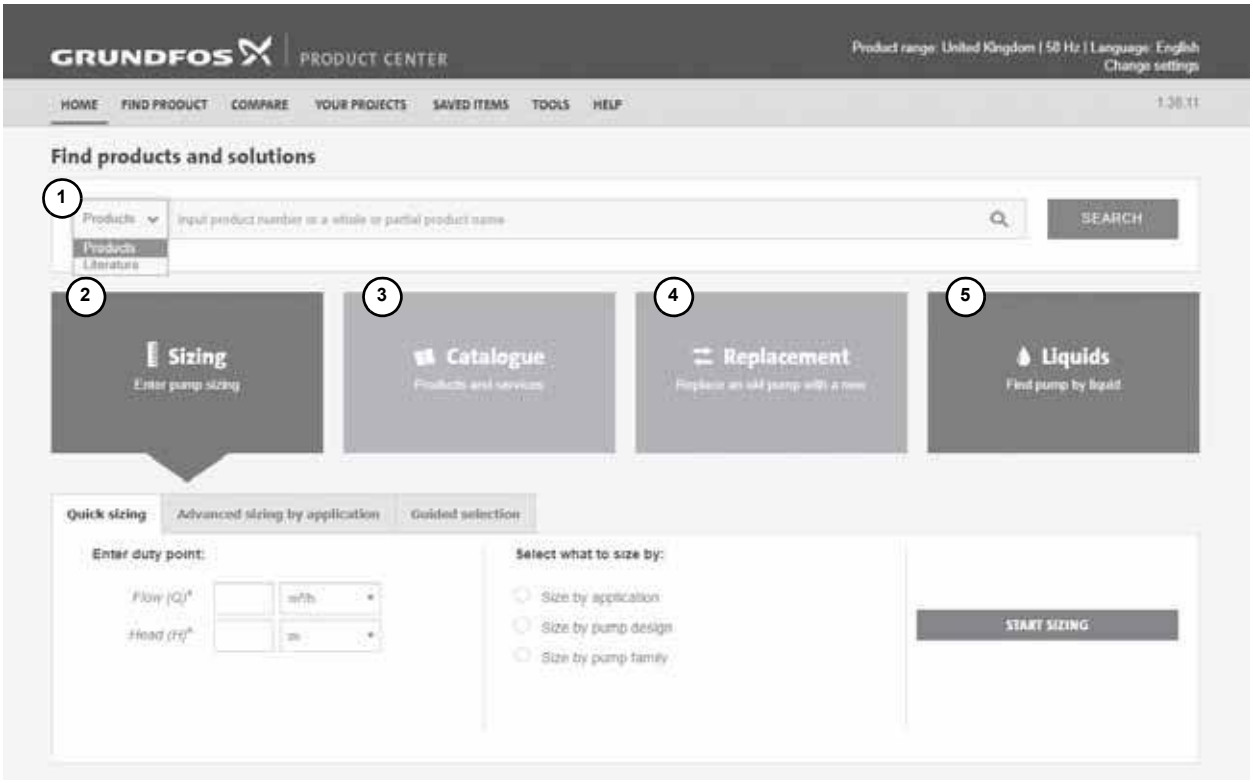

TM07 2383

Pos.	Description
1	This drop-down menu enables you to set the search function to "Products" or "Literature".
2	**SIZING** enables you to size a pump based on entered data and selection choices.
3	**CATALOGUE** gives you access to the Grundfos product catalogue.
4	**REPLACEMENT** enables you to find a replacement product. Search results will include information on the lowest purchase price the lowest energy consumption the lowest total life cycle cost.
5	**LIQUIDS** enables you to find pumps designed for aggressive, flammable or other special liquids.

© 2021 Grundfos Holding A/S, all rights reserved.

Trademarks displayed in this material, including but not limited to Grundfos, the Grundfos logo and "be think innovate" are registered trademarks owned by The Grundfos Group. All rights reserved.

96477803 01.2021
ECM: 1304652

GRUNDFOS A/S
DK-8850 Bjerringbro . Denmark
Telephone: +45 87 50 14 00
www.grundfos.com

GRUNDFOS