This document is Universe Solar and shall not without Universe Solar written permission be copied, imparted to third party or used for any unauthorized purpose.

WORKING COPY
THROWN AWAY AFTER USE

No	Changes and/or note no.-nr	Date	Change By
B			

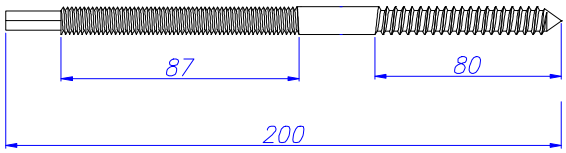

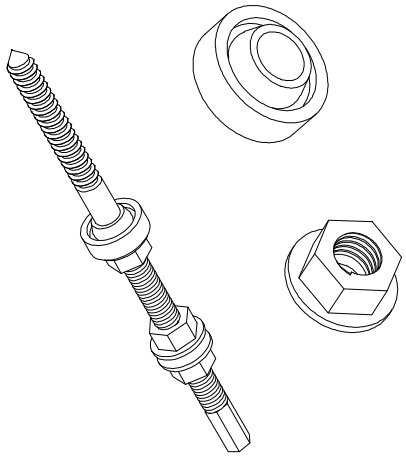

Scale: N.S.T	Drawn by: ID		
Date: 111011	App by: FL		
Universe Solar Technology Co.,Ltd.		hanger bolt	
		Code: UI-H01	Weight: kg
		Sheet 1 of 1	Volume: l
		Drw. no.	Rev. A