WORKING COPY
THROWN AWAY AFTER USE

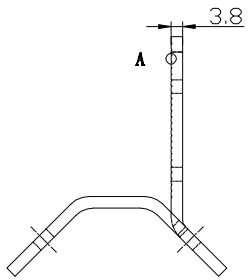

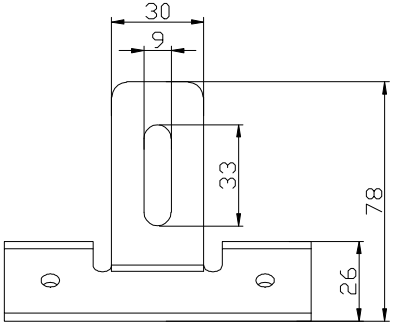

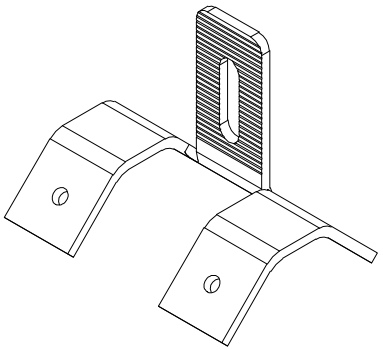

3D示意图

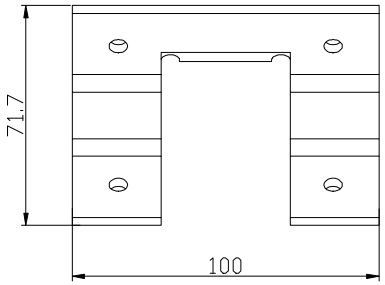

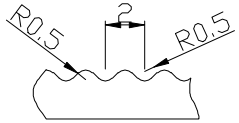

局部视图 A
比例 8:1

This document is Universe Solar and shall not without Universe Solar written permission be copied, imparted to third party or used for any unauthorized purpose.

No	Changes and/or note no.-nr	Date	Change By
B			

Scale N.S.T	Drawn by	Project UI-SS-01	Weight kg / Volume l
Date 2012-05-03	App by		Code / Sheet 1 of 1
Universe Solar Technology Co.,Ltd.			Draw. no. / Rev. A