Ultracell®

'Quality in Every Language'

LIT33-12

12.8V 33Ah

Lithium Series

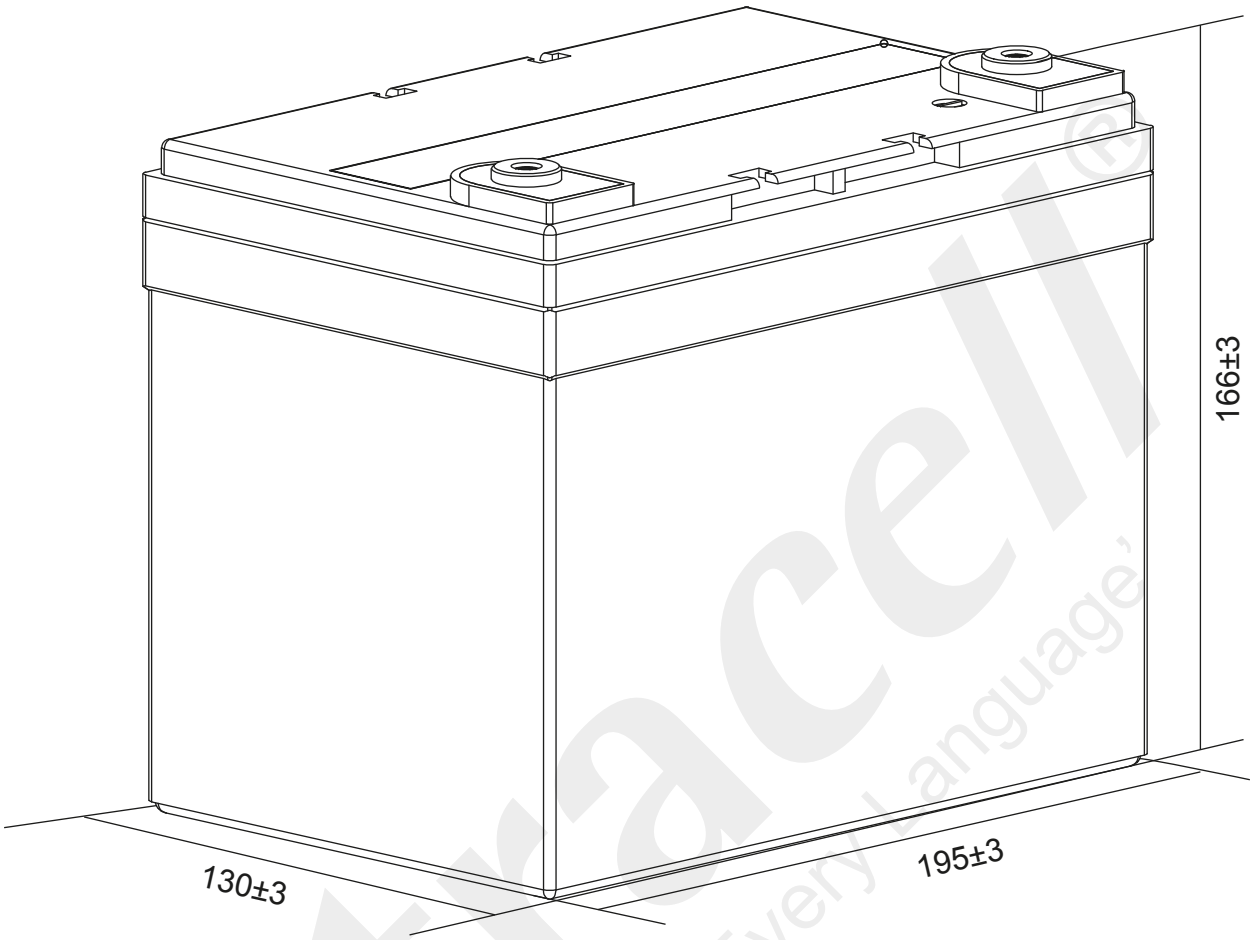



Technical Dimensions (mm)

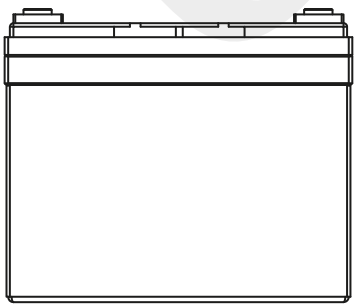

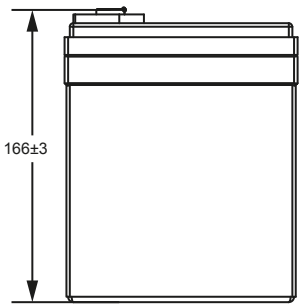

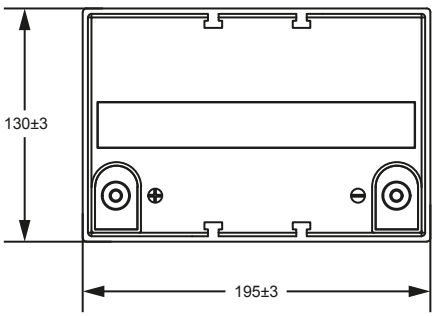

Ultracell (UK) Ltd | Vesty Business Park, Vesty Road, Liverpool, L30 1NY, United Kingdom
Tel: +44 (0) 151 523 2777 | Fax: +44 (0) 151 523 0855 | Email: info@ultracell.co.uk
www.ultracell.co.uk

LIT-V1-REV1 09/21
ALL DATA IS SUBJECT TO CHANGE WITHOUT NOTICE

Ultracell®
'Quality in Every Language'

TechData

LIT33-12
12.8V 33Ah
Lithium Series

Image



Terminal Dimensions (mm)

Standard
Terminal: F6

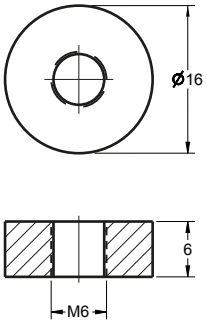

Technical Specification

Output	Nominal Voltage	12.8V
	Nominal Capacity	33Ah
	Minimum Capacity	31.6Ah
	Energy	422.4Wh
Terminal Type	Standard Terminal	F6
Container Material	Standard Option	ABS
	Flame Retardant Option (FR)	ABS (UL94:VO)
	IP Class	IP65
Standard Charge	Charge Voltage	14.6V/Set
	Standard Charge	0.2C (CC) charge to 3.65V/cell, then CV 3.65V/cell charge 3.5 hours
	Rapid Charge	1C (CC) charge to 3.65V/cell, then CV 3.65V/cell charge 3 hours
	Charge Current	3.5A
	Max. Charge Current	0.5C (A)
Standard Discharge	Continuous Discharge Current	1.0CA
	Discharge Cut-off Voltage	10V/Set
Discharge Characteristics	Operating Temp Range	Charge: 0 ~ 45°C Discharge: -20 ~ 60°C Storage: -20 ~ 45°C
Efficiency of Charge	100% @ 0.5C	
Efficiency of Discharge	96~99% @ 0.5C	
Cycle Life	≥2000 cycles @ 1C 100%DOD	
Battery Management System	Complete with BMS unit measuring current, voltage, single cell surface temperature and the ambient temperature of the battery.	

VdS

MH 29410

EMC 1188-C

IEC 60896
IEC 62321

Self Discharge

Ultracell® LIT batteries may be stored for up to 2 years at 25°C and then a refresh charge is required. For higher temperatures the time intervals will be shorter.

Transportation

Ultracell® LIT Batteries will be at 30% State of Charge when shipped in accordance to the applicable international and national government regulations. To prevent damage during transit, ensure packaging is safe and secure. Keep battery dry and away from direct sunlight. Suitable for all transportation vehicles.

Ultracell (UK) Ltd | Vesty Business Park, Vesty Road, Liverpool, L30 1NY, United Kingdom
Tel: +44 (0) 151 523 2777 | Fax: +44 (0) 151 523 0855 | Email: info@ultracell.co.uk
www.ultracell.co.uk

LIT-V1-REV1 09/21
ALL DATA IS SUBJECT TO CHANGE WITHOUT NOTICE

Ultracell®
'Quality in Every Language'

TechData

LIT33-12
12.8V 33Ah
Lithium Series

MH 29410

EMC 1188-C

IEC 60896
IEC 62321

Different Rate Discharge Curve (25°C)

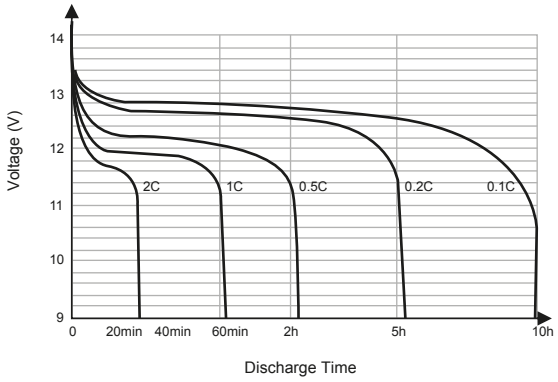

Different Temperature Discharge Curve (0.5C)

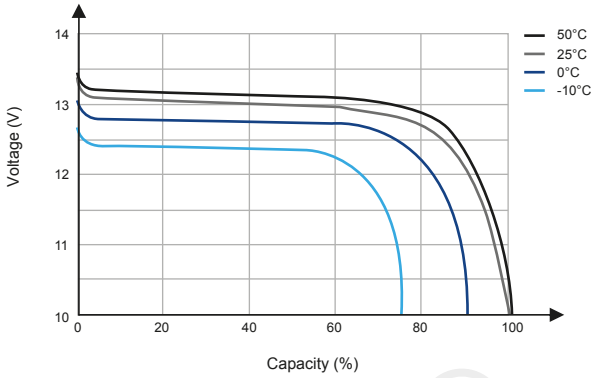

State of Charge Curve (0.5C, 25°C)

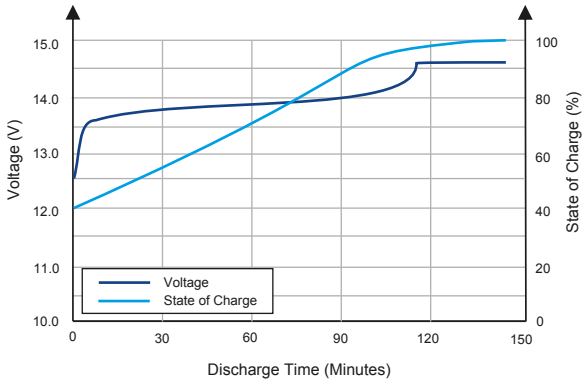

Charging Characteristics (0.5C, 25°C)

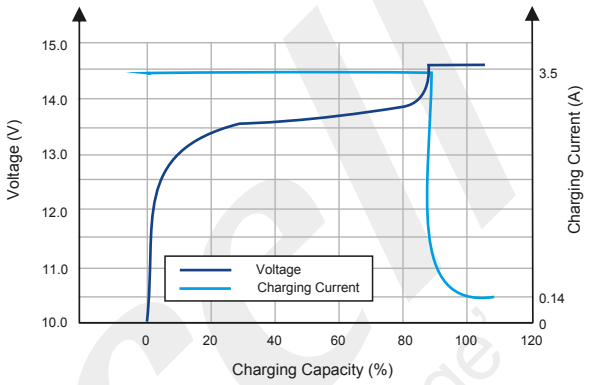

Cycle Life on D.O.D (25°C)

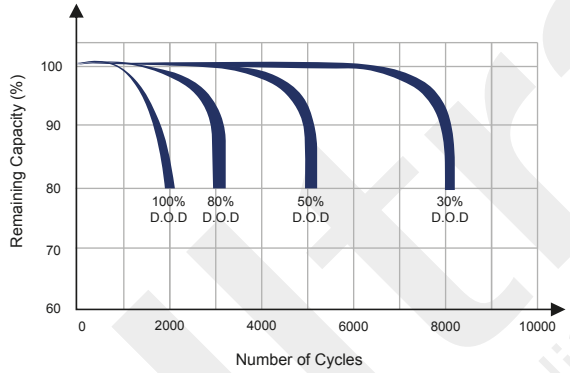

Temperature on Self Discharge Curve

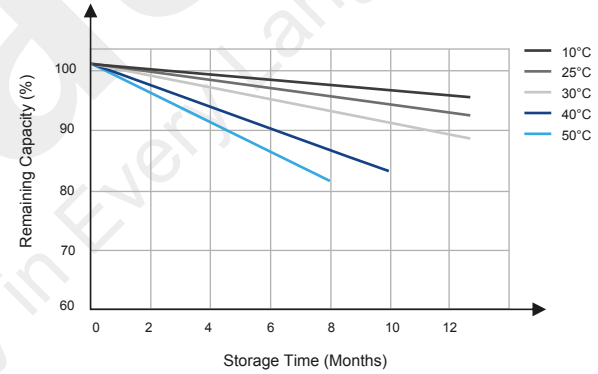

Ultracell®
'Quality in Every Language'

Ultracell (UK) Ltd | Vesty Business Park, Vesty Road, Liverpool, L30 1NY, United Kingdom
Tel: +44 (0) 151 523 2777 | Fax: +44 (0) 151 523 0855 | Email: info@ultracell.co.uk
www.ultracell.co.uk

LIT-V1-REV1 09/21
ALL DATA IS SUBJECT TO CHANGE WITHOUT NOTICE