LITHIUM BATTERY

LFP12100

LEOCH BATTERY

Features Of $LiFePO_4$ Battery

- Ultra light weight
- High integration, small size, high energy density
- Eco-friendly clean energy
- Long lifespan sustainable
- High efficiency



Application Scenarios

- Electric vehicles, Electric mobility
- Solar/wind energy storage system
- Telecommunication
- Medical equipment
- Lighting

Specification

Nominal Voltage		12.8V
Working Voltage		10-14.6V
Rated Capacity		100Ah
Energy		1280Wh
Positive Material		LFP
Weight		Approx.10.5Kg
Dimension	Length	330mm
	Width	173mm
	Container Height	212mm
Terminal Type		M8
Container Material		ABS
Ingress Protection		IP65
Temp. Range	Charge	0-55℃
	Discharge	-20~60℃
	Storage	-20~60℃
Recom. Temp. Range	Charge	15-35℃
	Discharge	15-35℃
	Storage	-10~35℃
Cycle Number		5000 cycles
Self-discharge Rate		≤3%/Month@25℃
Max.number of series and parallel connections		4S or 4P

Charge

Max Continuous Charge Current	100.0A
Recom. Charge Current	20.0A
Upper Limit Voltage	14.6V

DisCharge

Max Continuous Discharge Current	100.0A
Recom. Discharge Current	50.0A
Lower Limit Voltage	10V

Additional Function

Bluetooth

Physical Dimension-mm

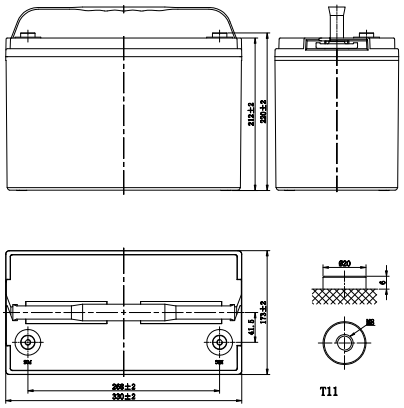

Data above is recommended and the picture is only for battery effect display, Leoch reserve the final right of explanation.
© LEOCH. All rights reserved.Trademarks and logos are the property of LEOCH and its affiliates unless otherwise noted.Subject to revisions without prior notice. E&OE.

Publication No:QB-12100-A-EN-V1.1-202511
E-mail: info.lithium@leoch.com
www.leoch.com