TYD12-200 12V200Ah



Specifications

Nominal Voltage		12V
Rated capacity (20 hour rate)		200Ah
Dimensions	Length	522±2mm(20.55inch)
	Width	238±2mm(9.37inch)
	Height	218±2mm(8.58inch)
	Total Height	222±2mm(8.74inch)
Approx. Weight		54kg(118.8lbs)±3%

Outer dimensions (mm)

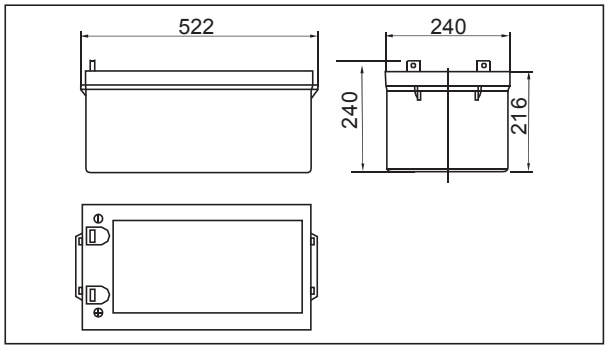

Terminal Type (mm)

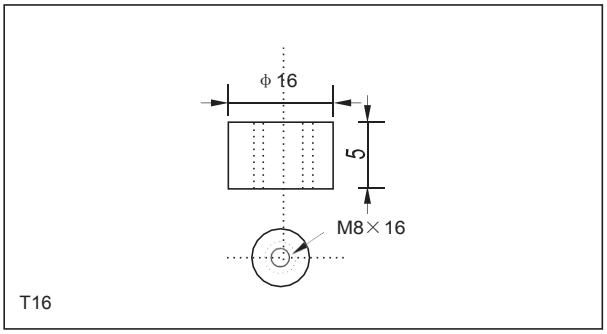

Characteristics

Capacity (25℃)	20HR(10.8V)	200Ah
	10HR(10.8V)	185Ah
	1HR(10.5V)	103Ah
Terminal type		T16
Internal resistance (Fully charged,25℃)		Approx. 3m Ω
Capacity affected by temperature (10HR)	40℃	102%
	25℃	100%
	0℃	85%
	-15℃	65%
Self-discharge (25℃)	3 months	Remaining Capacity:91%
	6 months	Remaining Capacity:82%
	12 months	Remaining Capacity:65%
Nominal operating temperature		25℃ ±3℃(77℉±5℉)
Operating temperature range	Discharge	-15~40°C (Ideal: 20~25°C)
	Charge	-10~40°C (Ideal: 20~25°C)
	Storage	-20℃~40℃
Float charging voltage(25℃)		13.50 to 13.80V Temperature compensation: -18mV/℃
Cyclical voltage(25℃)		14.40 to 14.80V Temperature compensation: -30mV/℃
Maximum charging current		60A
Maximum discharge current		1325A(5 sec.)
Designed floating life(20℃)		10years

Construction

Component	Positive plate	Negative plate	Container	Cover	Separator	Electrolyte	Safety valve	Terminal
Raw material	Lead dioxide	Lead	ABS	ABS	AGM	Sulfuric acid	Rubber	Copper

Constant Current Discharge Characteristics Unit:A(25℃,77℉)

F.V/Time	15m i n	30min	60min	2h	3h	4h	5h	6h	8h	10h	20h
9.60V	324	194	119	70.3	50.7	40.5	34.6	30.1	23.8	19.6	10.4
9.90V	315	190	117	70.0	50.4	40.2	34.4	29.8	23.6	19.5	10.4
10.2V	304	184	114	69.3	50.1	39.9	34.2	29.6	23.5	19.5	10.4
10.5V	294	179	110	68.3	49.7	39.6	33.9	29.5	23.3	19.4	10.3
10.8V	278	173	107	66.6	48.2	38.5	32.9	28.6	22.6	19.3	10.2

Constant Power Discharge Characteristics Unit:W(25℃,77℉)

F.V/Time	15min	30min	60min	2h	3h	4h	5h	6h	8h	10h	20h
9.60V	3552	2171	1357	815	627	476	409	355	282	234	125
9.90V	3467	2128	1337	810	593	473	406	353	280	233	125
10.2V	3339	2062	1303	803	588	470	403	351	278	233	124
10.5V	3226	2013	1262	791	584	466	400	348	277	231	124
10.8V	3055	1939	1221	770	566	452	389	338	268	230	123

Note: The above characteristics data can be obtained within three charge or discharge cycles.

TYD12-200Ah 12V200Ah

Discharge characteristics(25°C)

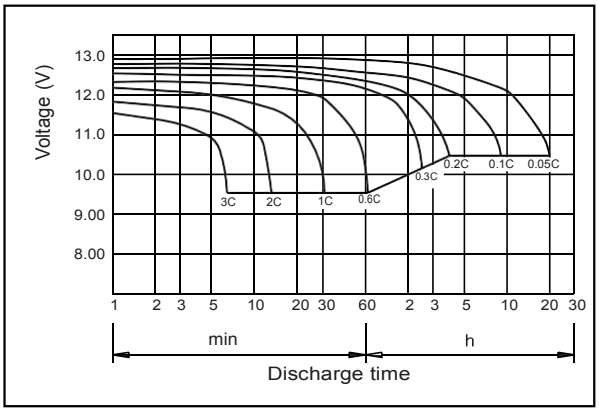

Charging characteristics (25°C)

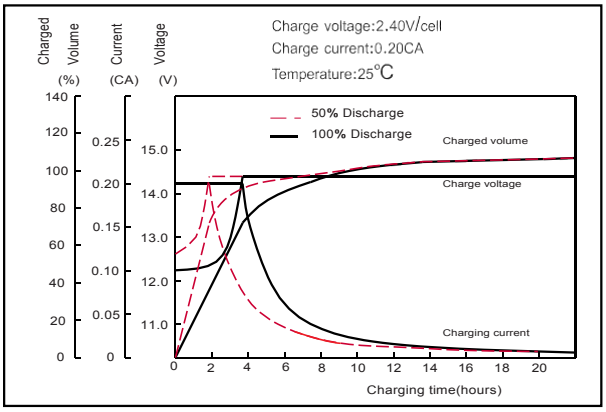

Temperature effects on Capacity

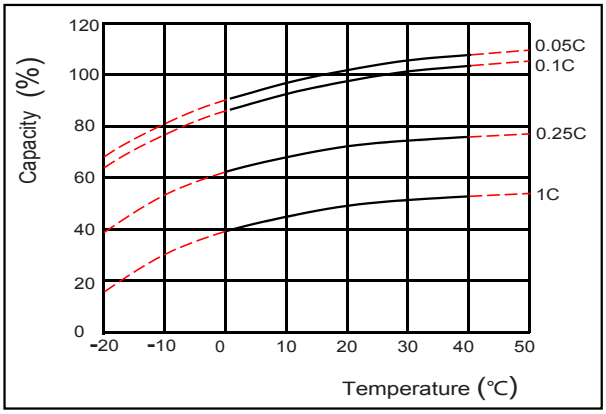

Self-discharge characteristics

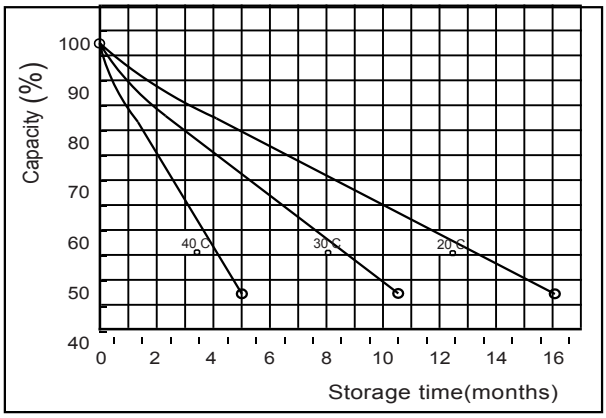

Floating life on Temperature

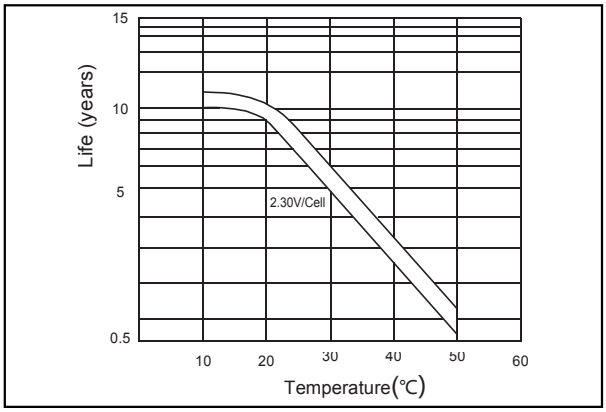

Cycle life on D.O.D (25℃)

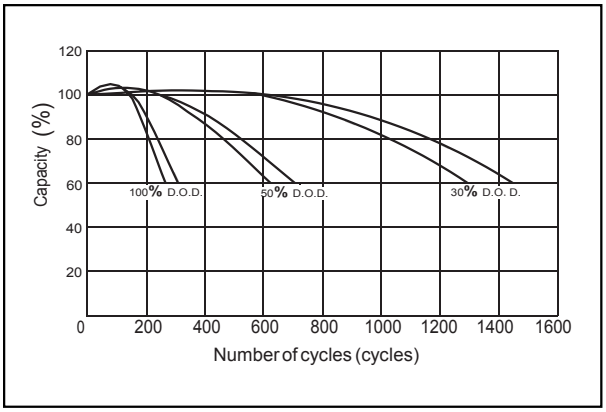

The relationship for OCV and Capacity (25℃)

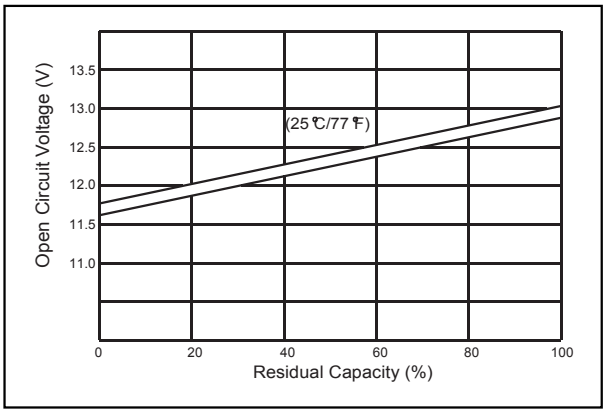

The relationship for Charging voltage and Temperature

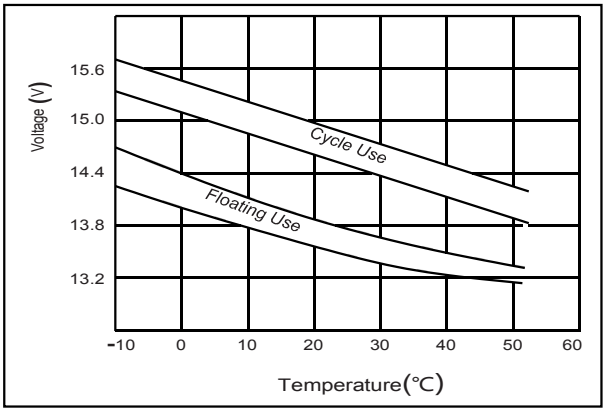

CE