TYG12-33 12V33Ah



Specifications

Nominal Voltage		12V
Rated capacity (20 hour rate)		33Ah
Dimensions	Length	195±2mm(7.68inch)
	Width	130±2mm(5.12inch)
	Height	155±2mm6.10inch)
	Total Height	T14:167±2mm(6.57inch) T6:180±2mm(7.09inch)
Approx. Weight		9.4kg(20.68lbs)±4%

Outer dimensions (mm)

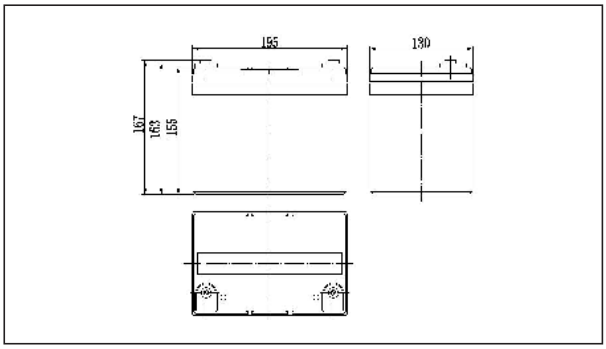

Terminal Type (mm)

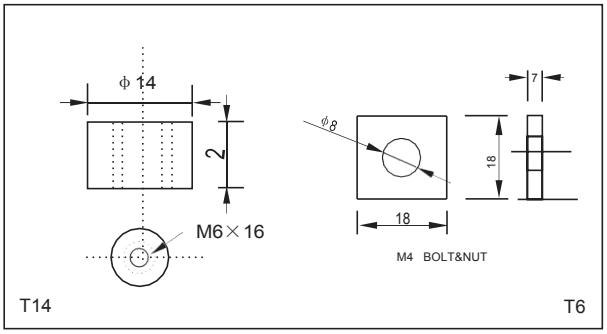

Characteristics

Capacity (25℃)	20HR(10.8V)	33Ah
	3HR(10.8V)	31Ah
	1HR(10.5V)	17Ah
Terminal type		T14/T6
Internal resistance (Fully charged,25℃)		Approx.9.5m Ω
Capacity affected by temperature (10HR)	40℃	102%
	25℃	100%
	0℃	85%
	-15℃	65%
Self-discharge (25℃)	3 months	Remaining Capacity:91%
	6 months	Remaining Capacity:82%
	12 months	Remaining Capacity:65%
Nominal operating temperature		25℃ ±3℃(77℉±5℉)
Operating temperature range	Discharge	-15~40°C (Ideal: 20~25°C)
	Charge	-10~40°C (Ideal: 20~25°C)
	Storage	-20℃~40℃
Float charging voltage(25℃)		13.40 to 13.60V Temperature compensation: -18mV/℃
Cyclic charging voltage(25℃)		14.10 to 14.40V Temperature compensation: -30mV/℃
Maximum charging current		6.6A
Maximum discharge current		308A(5 sec.)
Designed floating life(20℃)		12years

Construction

Component	Positive plate	Negative plate	Container	Cover	Separator	Electrolyte	Safety valve	Terminal
Raw material	Lead dioxide	Lead	ABS	ABS	AGM	Gel	Rubber	Copper / lead

Constant Current Discharge Characteristics Unit:A(25℃,77℉)

F.V/Time	10min	15min	30min	60min	2h	3h	4h	5h	8h	10h	20h
9.60V	60.8	49.8	30.2	18.7	11.4	8.10	6.35	5.39	3.81	3.17	1.68
9.90V	58.9	48.6	29.6	18.4	11.3	8.05	6.32	5.37	3.79	3.16	1.68
10.2V	56.5	46.8	28.7	17.9	11.2	7.99	6.28	5.33	3.77	3.15	1.67
10.5V	54.1	45.2	28.1	17.4	11.1	7.95	6.23	5.29	3.74	3.13	1.66
10.8V	51.1	42.9	27.0	16.8	10.5	7.79	6.04	5.14	3.62	3.12	1.65

Constant Power Discharge Characteristics Unit:W(25℃,77℉)

F.V/Time	10min	15min	30min	60min	2h	3h	4h	5h	8h	10h	20h
9.60V	656	548	339	213	132	95	74.8	63.8	45.3	37.9	20.2
9.90V	636	534	332	210	131	94	74.3	63.4	45.1	37.8	20.1
10.2V	610	514	322	205	130	94	73.8	63.1	44.7	37.7	20.1
10.5V	584	497	314	198	128	93	73.3	62.6	44.4	37.5	19.9
10.8V	551	471	303	192	125	92	71.1	60.7	43.1	37.2	19.8

Note: The above characteristics data can be obtained within three charge or discharge cycles.

TYG12-33Ah 12V33Ah

Discharge characteristics(25°C)

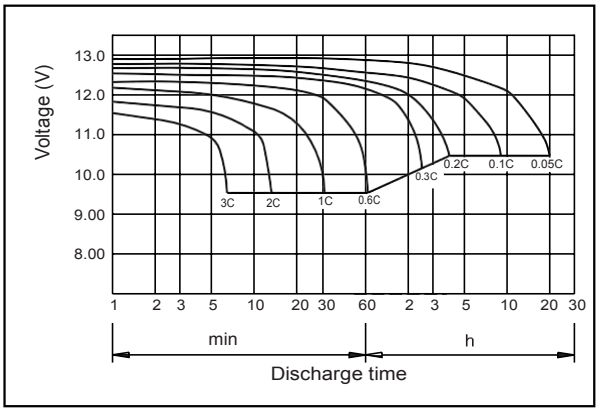

Charging characteristics (25°C)

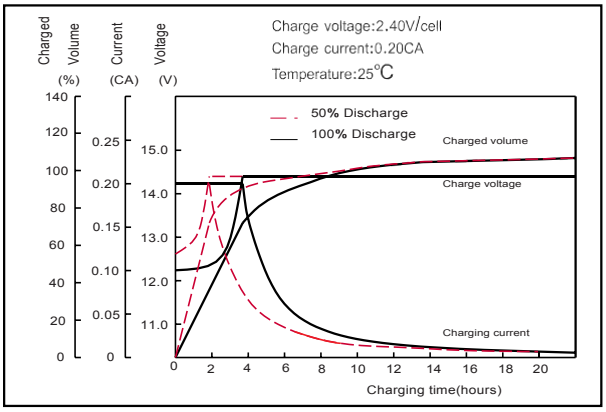

Temperature effects on Capacity

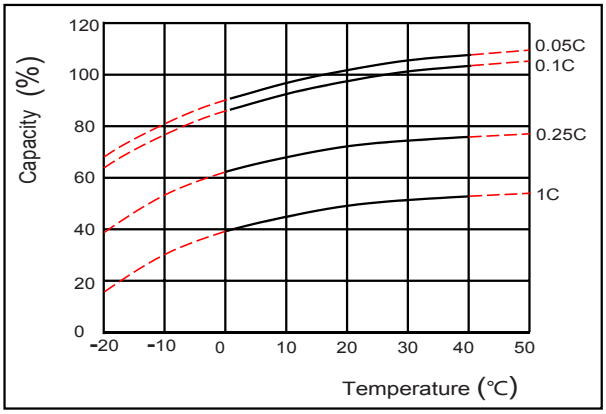

Self-discharge characteristics

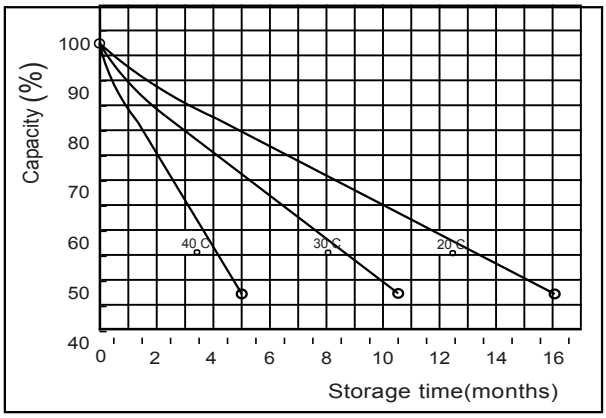

Floating life on Temperature

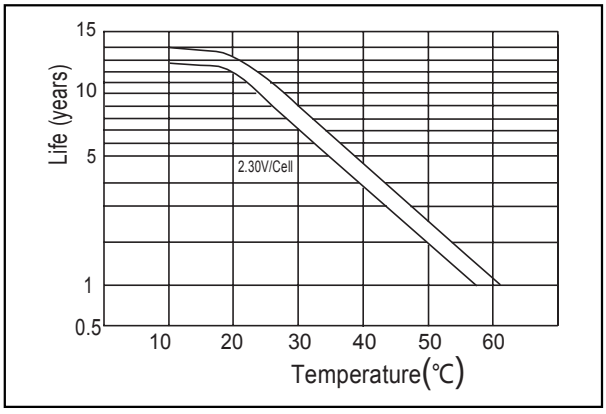

Cycle life on D.O.D (25℃)

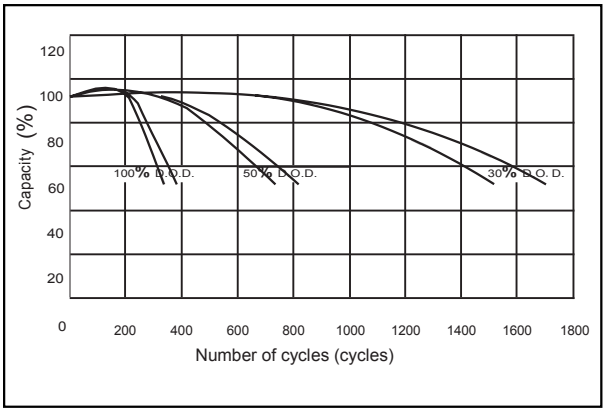

The relationship for OCV and Capacity (25℃)

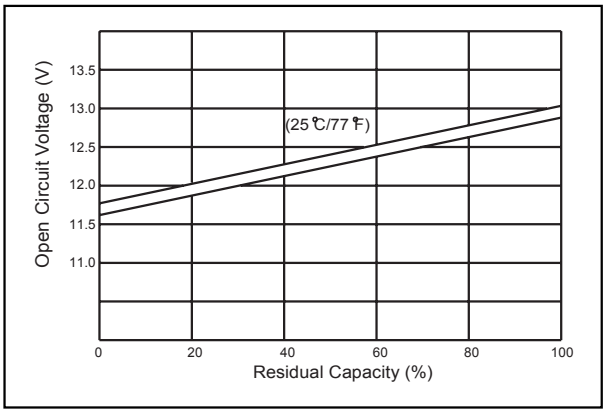

The relationship for Charging voltage and Temperature

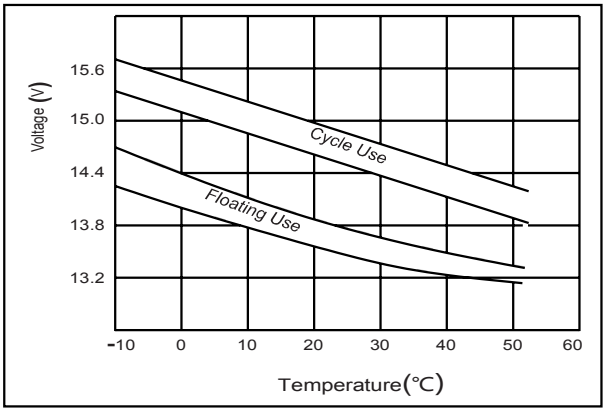

CE